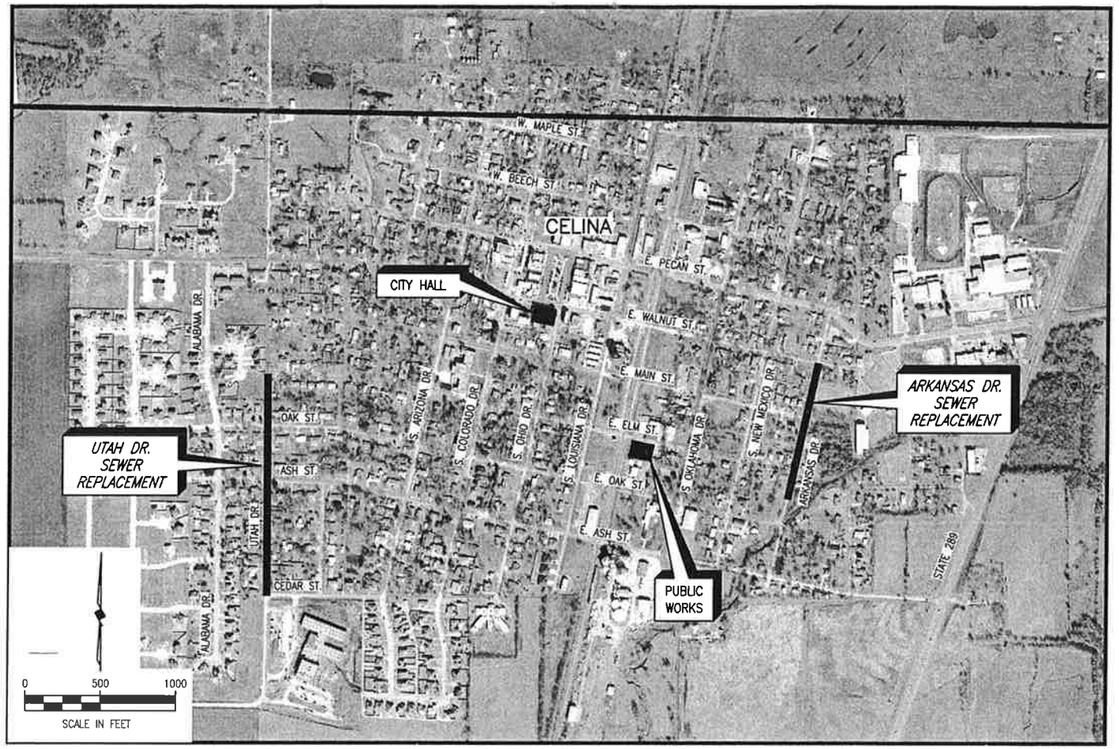


## LOCATION MAP

## GENERAL PROJECT NOTES

1) CONTRACTOR SHALL BE RESPONSIBLE FOR PROVIDING ADEQUATE MEASURES FOR PREVENTING STORM WATER RUNOFF FROM ENTERING THE TRENCH DURING CONSTRUCTION.

2) AT THE END OF EACH WORK DAY, THE CONTRACTOR SHALL ERECT A TEMPORARY SECURITY FENCE AT ALL EXCAVATIONS.

3) TOPSOIL SHALL BE STOCKPILED AND REPLACED TO A MINIMUM DEPTH OF 6 INCHES AND DISC HARROWED TO A MINIMUM DEPTH OF 4 INCHES. CONTRACTOR IS ALLOWED TO IMPORT TOPSOIL TO ACHIEVE 6" DEPTH.

4) FINISHED GROUND SHALL HAVE NO MORE ROCKS OVER 1 INCH THAN SURROUNDING UNDISTURBED GROUND. ALL ROCKS LARGER THAN 1 INCH SHALL BE COLLECTED AND DISPOSED OF BY THE CONTRACTOR.

5) CONTRACTOR SHALL VERIFY THE LOCATIONS OF ALL EXISTING UTILITIES SUFFICIENTLY IN ADVANCE OF THE CONSTRUCTION SO THAT IF IT IS NECESSARY TO CHANGE OR MOVE UTILITY, THE PROGRESS OF THE WORK WILL NOT BE DELAYED.

6) CONTRACTOR SHALL BE RESPONSIBLE FOR THE PROTECTION OF ALL EXISTING SERVICE LINES CROSSED OR EXPOSED BY HIS CONSTRUCTION OPERATIONS. WHERE EXISTING SERVICE LINES ARE CUT, BROKEN OR DAMAGED, THE CONTRACTOR SHALL IMMEDIATELY REPLACE THE SERVICE LINES WITH THE SAME TYPE OF ORIGINAL CONSTRUCTION, OR BETTER.

7) CONCRETE THRUST BLOCKING SHALL BE SUBSIDIARY TO PIPE COST AND SHALL BE SIZED TO RESTRAIN TEST PRESSURES. CONTRACTOR SHALL DIRECT (AND PAY) PIPE COMPANY TO SIZE THRUST BLOCKS. THRUST BLOCKS SHALL BE LOCATED AT ALL HORIZONTAL AND VERTICAL BENDS, REGARDLESS IF PIPE JOINTS ARE WELDED.

8) CONTRACTOR SHALL PROVIDE A STORM WATER POLLUTION PREVENTION PLAN AND ALL APPURTENANCES TO COMPLY WITH THE LATEST EPA STORM WATER POLLUTION PREVENTION REGULATIONS.

9) CONTRACTOR SHALL ANTICIPATE ENCOUNTERING GROUND WATER THROUGHOUT THIS PROJECT AND SHALL PROVIDE ADEQUATE MEASURES FOR DEWATERING THE TRENCH. ALL COSTS FOR PUMPS AND/OR OTHER RELATED APPURTENANCES SHALL BE INCLUDED IN THE APPROPRIATE ITEM OF THE BID SCHEDULE.

10) PAVEMENT REMOVAL AND REPLACEMENT SHOWN ON PLANS REFLECT TRENCH WIDTH PLUS TWO FEET. IT DOES NOT INCLUDE WIDTH FOR TRENCH BOXES. PAVEMENT REPLACEMENT SHALL BE PAID ON A SQUARE YARD BASIS AS PROVIDED FOR IN THE PROPOSAL AND BID SCHEDULE. ALL DRIVEWAYS ARE TO BE RETURNED TO ORIGINAL OR BETTER CONDITION.

11) CONTRACTOR SHALL PROTECT EXISTING CONCRETE PAVEMENT FROM TRACKED EQUIPMENT BY USE OF TIMBERS.

12) CONTRACTOR SHALL RESET ALL IRON RODS AND OTHER PROPERTY MARKERS DISTURBED BY CONSTRUCTION (NO SEPARATE PAY ITEM).

13) UTILITY OWNERS SHALL DETERMINE IF, WHEN AND WHICH UTILITY OR LIGHT POLES (IN THE VICINITY OF PROPOSED CONSTRUCTION) HAVE A NEED FOR ADDITIONAL SUPPORT. ONCE THE UTILITY OWNER MAKES THE DECISION AS TO WHETHER OR NOT UTILITY POLES AND LIGHT STANDARDS/POLES (NEAR EXCAVATION) REQUIRE ADDITIONAL SUPPORT, THE CONTRACTOR SHALL PROVIDE FOR SUPPORT OF SAID POLE OR LIGHT.

14) ACCESS SHALL BE MAINTAINED TO ALL DRIVEWAYS THROUGHOUT THE CONSTRUCTION. ANY AND ALL EXCAVATIONS NEAR DRIVEWAYS OR MEDIAN OPENINGS SHALL BE COVERED WITH TRAFFIC-SUPPORTING METAL PLATES OR BACKFILLED AND TOPPED WITH TEMPORARY ASPHALT PAVEMENT UNTIL PERMANENT CONCRETE PAVEMENT IS REPLACED.

15) ALL DISTURBED AREAS ALONG ROUTE CAUSED BY EXCAVATION OR TRAFFIC SHALL BE TILLED, SEEDED AND ESTABLISHED. COST FOR REESTABLISHING VEGETATION IS SUBSIDIARY TO THE PROJECT (NO SEPARATE PAY ITEM).

16) SITE-SPECIFIC TRENCH SAFETY PLAN SHALL INCLUDE A PLAN FOR EACH BORE PIT.

17) DAMAGED IRRIGATION SYSTEMS SHALL BE REPAIRED OR REPLACED TO THE PROPERTY OWNER'S SATISFACTION (NO SEPARATE PAY ITEM). CONTRACTOR SHALL IMMEDIATELY REPAIR DAMAGE TO UNDERGROUND SPRINKLER SYSTEMS. ALL REPAIRS SHALL BE COMPLETED BY AN IRRIGATOR LICENSED IN THE STATE OF TEXAS. SIGNS ALONG ROUTE REMOVED FOR CONVENIENCE OF CONSTRUCTION SHALL BE REESTABLISHED AFTER COMPLETION OF BACKFILLING IN THAT AREA (NO SEPARATE PAY ITEM).

18) EROSION CONTROL DEVICES SHALL BE INSTALLED AS PER THE CONTRACTOR'S STORM WATER PREVENTION POLLUTION PLAN.

19) BACKFILL FOR ALL BORE PITS SHALL BE PLACED IN 8-INCH LOOSE LIFTS (LOOSE MEASUREMENT) AND BE MECHANICALLY COMPACTED TO AT LEAST 90% OF MAXIMUM DENSITY AS DETERMINED BY ASTM D698 AT OPTIMUM MOISTURE PLUS OR MINUS TWO POINTS.

20) ALL FENCES ARE TO BE RETURNED TO ORIGINAL OR BETTER CONDITION AND IN THEIR EXACT LOCATION. (NO SEPARATE PAY ITEM)

## SHEET INDEX


GENERAL

1 COVER SHEET
2 LOCATION MAP AND SHEET INDEX

ARKANSAS DRIVE SANITARY SEWER REPLACEMENT

3 – 4 PLAN-PROFILE SHEETS

UTAH DRIVE SANITARY SEWER REPLACEMENT

5 – 6 PLAN-PROFILE SHEETS

DETAILS

7 – 11 MISCELLANEOUS DETAILS


## NOTE TO BIDDERS

THE CITY WILL CONSIDER TWO METHODS OF REHABILITATION FOR THE UTAH DRIVE SANITARY SEWER:

- OPEN CUT METHOD (BID SCHEDULE 2)
- CURED-IN-PLACE PIPE METHOD (BID SCHEDULE 3)

BASED ON THE BIDS RECEIVED, THE CURED-IN-PLACE OPTION (BID SCHEDULE 3) MAY BE AWARDED. IF, HOWEVER THE VIDEO INSPECTION FINDS THE CURED-IN-PLACED OPTION IS NOT SUITABLE, THE CITY RESERVES THE RIGHT TO IMPLEMENT WORK UNDER BID SCHEDULE 2.

## SUMMARY OF ABBREVIATIONS AND DEFINITIONS

| GENERAL TOPOGRAPHY & HORIZONTAL/ VERTICAL CONTROL | | | | TREES & BUSHES | |
|---|---|---|---|---|---|
| ABBREVIATION | DEFINITION | ABBREVIATION | DEFINITION | ABBREVIATION | DEFINITION |
| B.C. | BACK OF CURB | P.I. | POINT OF INTERSECTION | B.D. | BOIS D'ARC TREE |
| B.-B. | BACK TO BACK | ℄ | PROPERTY LINE | B.T. | BLACK THORN TREE |
| ℄ | CENTERLINE | P.P. | POWER POLE | C.B. | CHINABERRY TREE |
| C.M.A.P. | CORRUGATED METAL ARCH PIPE | P.R.C. | POINT OF REVERSE CURVATURE | CDR. | CEDAR TREE |
| C.M.P. | CORRUGATED METAL PIPE | P.T. | POINT OF TANGENCY | C.E. | CEDAR ELM TREE |
| C.I. | CAST IRON | P.V.C. | PLASTIC PIPE | C.M. | CRAPE MYRTLE TREE |
| C.O. | CLEANOUT | P.V.I. | POINT OF VERTICAL INTERSECTION | C.P. | CHINESE PISTACHIO TREE |
| CONN. | CONNECTION | R. | RADIUS | C.W. | COTTONWOOD TREE |
| CULV. | CULVERT | R.C. | REINFORCED CONCRETE | CYP. | CYPRESS TREE |
| D.I.P. | DUCTILE IRON PIPE | R.C.P. | REINFORCED CONCRETE PIPE | H.B. | HACKBERRY TREE |
| EL. | ELEVATION | R.C.C.P. | REINF. CONCRETE CYLINDER PIPE | HICK. | HICKORY TREE |
| ELEC. | BURIED ELECTRICAL POWER LINE | R.O.W. | RIGHT OF WAY | H.T. | HAWTHORNE TREE |
| ENC. | ENCASEMENT | SAN. SEW. OR S.S. | SANITARY SEWER | JAP. | JAPONICA TREE |
| E.P. | EDGE OF PAVEMENT | S.H. | LAWN SPRINKLER HEAD | LIG. | LIGUSTRUM BUSH |
| ESMT. | EASEMENT | ℄ | SURVEY LINE | L.O. | LIVE OAK TREE |
| F.-F. | FACE TO FACE | S.S. | SANITARY SEWER | LOC. | LOCUST TREE |
| F.H. | FIRE HYDRANT | S.S.M.H. | SANITARY SEWER MANHOLE | MAG. | MAGNOLIA TREE |
| F.M. | SANITARY SEWER FORCE MAIN | ST. SEW. | STORM SEWER | MAP. | MAPLE TREE |
| F.L. | FLOW LINE | S.V.B. | LAWN SPRINKLER VALVE BOX | MSQ. | MESQUITE TREE |
| G.L.M. | GAS LINE MARKER | T.B. | TELEPHONE CABLE BOX | MIM. | MIMOSA TREE |
| G.M. | GAS METER | T.C. | TOP OF CURB | MUL. | MULBERRY TREE |
| G.V. | GAS VALVE | TEL. | BURIED TELEPHONE CABLE | NAN. | NANDENA BUSH |
| GUT. | GUTTER | T.M.H. | TELEPHONE CABLE MANHOLE | PEC. | PECAN TREE |
| HDWL. | HEADWALL | TO F. | TO FACE (OF CURB) | PER. | PERSIMMON TREE |
| I.P.F. OR I.R.F. | IRON PIN (ROD) FOUND | TRANS. | ELECTRICAL TRANSFORMER | PHOT. | RED TIPPED PHOTINIA BUSH |
| L.L. | LANDSCAPING LIGHT | T.V. | BURIED TELEVISION CABLE | PIST. | CHINESE PISTACHIO TREE |
| L.P. | LIGHT POLE | T.V.B. | CABLE TELEVISION BOX | R.B. | REDBUD TREE |
| L.S. | SANITARY SEWAGE LIFT STATION | U.G.C.M. | UNDERGROUND CABLE MARKER | R.O. | RED OAK TREE |
| L.S.T. | LANDSCAPING TIMBERS | U.P.M. | UNDERGROUND PIPELINE MARKER | S.G. | SWEET GUM TREE |
| M.B. | MAILBOX | V.C. | VERTICAL CURVE | SYC. | SYCAMORE TREE |
| M.B.G.F. | METAL BEAM GUARD FENCE | W. OR W.L. | WATER LINE | WIL. | WILLOW TREE |
| M.H. | MANHOLE | W.M. | WATER METER | | |
| P.C. | POINT OF CURVATURE | W.V. | WATER VALVE | | |


These plans and related specifications were prepared for construction of this specific project only. Reuse of these documents is not permitted without written authorization of Birkhoff, Hendricks, & Conway, L.L.P.


THESE DOCUMENTS ARE FOR BIDDING, CONSTRUCTION, AND PERMIT PURPOSES.
DATE: 12/14/05

STATE OF TEXAS
GARY C. HENDRICKS
65226
REGISTERED PROFESSIONAL ENGINEER

# CITY OF CELINA, TEXAS

2005 COMMUNITY DEVELOPMENT BLOCK GRANT

UTAH DRIVE & ARKANSAS DRIVE
SANITARY SEWER REPLACEMENT
**LOCATION MAP AND SHEET INDEX**

BIRKHOFF, HENDRICKS & CONWAY, L.L.P.
CONSULTING ENGINEERS
Dallas, Texas

| | | | | |
|---|---|---|---|---|
| DESIGNED BY: G.C.H. | PROJECT: 2005 133 | SHEET NO. 2 OF 11 SHEETS |
| DRAWN BY: B.H. & C. | DATE: DECEMBER 2005 | |

REVISED 12/14/05 JAM 2005133-02.DWG SCALE: 1=1 BLOCKS: LEGEND, LOCATION, INDEX, GENNOTES

34"x22" FULL PLOT: DAVIS34x22.CTB HALF PLOT: 11x17D.CTB

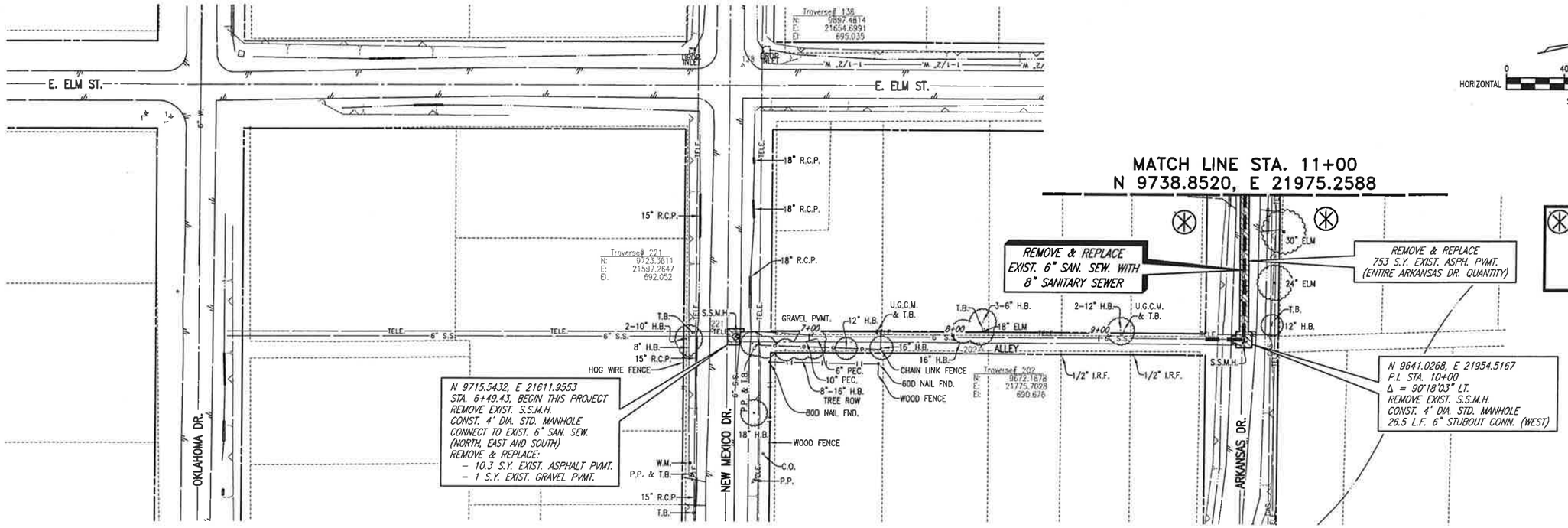


## LEGEND

- REMOVE & REPLACE ASHPALT PAVEMENT
- REMOVE & REPLACE CONCRETE PAVEMENT
- REMOVE & REPLACE GRAVEL PAVEMENT
- REMOVE & REPLACE BRICK PAVEMENT

These plans and related specifications were prepared for construction of this specific project only. Reuse of these documents is not permitted without written authorization of Birkhoff, Hendricks, & Conway, L.L.P.

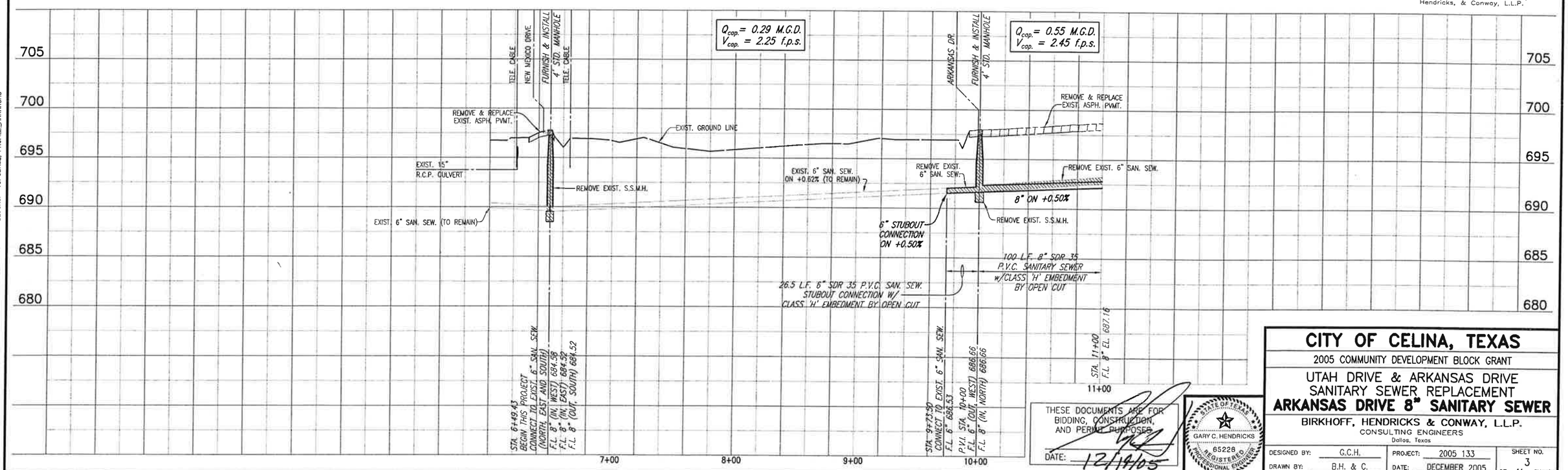


THESE DOCUMENTS ARE FOR BIDDING, CONSTRUCTION, AND PERMIT PURPOSES.

DATE: 12/14/05

STATE OF TEXAS — GARY C. HENDRICKS — 65228 — REGISTERED PROFESSIONAL ENGINEER

# CITY OF CELINA, TEXAS

2005 COMMUNITY DEVELOPMENT BLOCK GRANT

UTAH DRIVE & ARKANSAS DRIVE SANITARY SEWER REPLACEMENT

## ARKANSAS DRIVE 8" SANITARY SEWER

BIRKHOFF, HENDRICKS & CONWAY, L.L.P.
CONSULTING ENGINEERS
Dallas, Texas

| | | | |
|---|---|---|---|
| DESIGNED BY: G.C.H. | PROJECT: 2005 133 | SHEET NO. 3 |
| DRAWN BY: B.H. & C. | DATE: DECEMBER 2005 | OF 11 SHEETS |

REVISED 12/13/05 JAM 2005133-03.DWG SCALE: 1=40 BLOCKS: TOPOBASE, PROFILE_ARKANSAS

AT LOCATIONS DETERMINED BY THE CITY
FURNISH & INSTALL:
15-4" SERVICE TEES
450 L.F. 4" SERVICE LATERAL
15-DOUBLE CLEANOUTS

MATCH LINE STA. 11+00
N 9738.8520, E 21975.2588

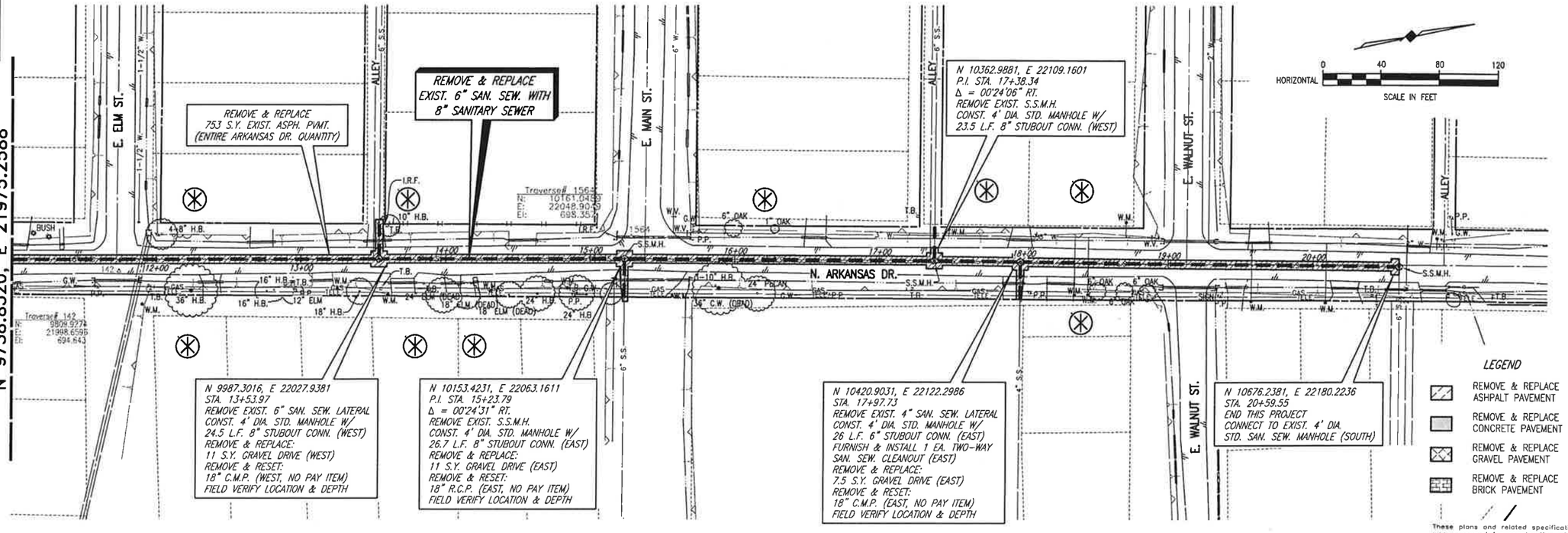


These plans and related specifications were prepared for construction of this specific project only. Reuse of these documents is not permitted without written authorization of Birkhoff, Hendricks, & Conway, L.L.P.

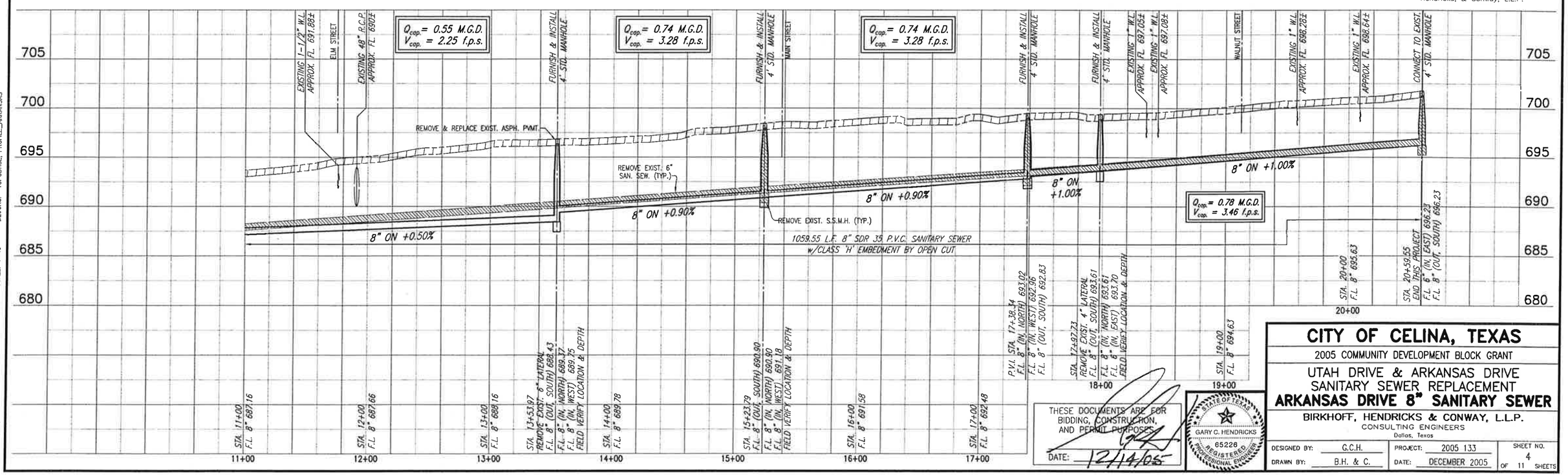


THESE DOCUMENTS ARE FOR BIDDING, CONSTRUCTION, AND PERMIT PURPOSES.
DATE: 12/14/05

STATE OF TEXAS
GARY C. HENDRICKS
65226
REGISTERED PROFESSIONAL ENGINEER

# CITY OF CELINA, TEXAS

2005 COMMUNITY DEVELOPMENT BLOCK GRANT

UTAH DRIVE & ARKANSAS DRIVE
SANITARY SEWER REPLACEMENT

## ARKANSAS DRIVE 8" SANITARY SEWER

BIRKHOFF, HENDRICKS & CONWAY, L.L.P.
CONSULTING ENGINEERS
Dallas, Texas

| | | | | |
|---|---|---|---|---|
| DESIGNED BY: G.C.H. | PROJECT: 2005 133 | SHEET NO. 4 OF 11 SHEETS |
| DRAWN BY: B.H. & C. | DATE: DECEMBER 2005 | |

REVISED 12/13/05 JAM 2005133-04.DWG SCALE: 1=40 BLOCKS: TOPOBASE, PROFILE_ARKANSAS

AT LOCATIONS DETERMINED BY THE CITY
FURNISH & INSTALL:
XX-4" SERVICE TEES
XXX L.F. 4" SERVICE LATERAL
XX-DOUBLE CLEANOUTS

BID SCHEDULE 2 OR 3
N 10284.5396, E 18518.0403
STA. 0+00, BEGIN THIS PROJECT
CONNECT TO EXIST. 4' DIA. S.S.M.H.
W/DROP CONNECTIONS (SOUTH)

BID SCHEDULE 2 OR 3
N 9930.5484, E 18519.4355
P.I. STA. 3+53.99
Δ = 00°42'45" RT.
REMOVE EXIST. S.S.M.H.
CONST. 4' DIA. DROP MANHOLE W/
32 L.F. 8" STUBOUT CONN. (EAST) &
28 L.F. 8" STUBOUT CONN. (WEST)
REMOVE & REPLACE:
5 L.F. CONC. CURB & GUTTER (WEST)

BID SCHEDULE 2
REMOVE & REPLACE
EXIST. 8" SAN. SEW. WITH
PROP. 8" SANITARY SEWER

BID SCHEDULE 2 OR 3
N 9573.2629, E 18516.4006
P.I. STA. 7+11.29
= 00°14'35" RT.
REMOVE EXIST. S.S.M.H.
CONST. 4' DIA. DROP MANHOLE W/
33 L.F. 8" STUBOUT CONN. (EAST) &
27 L.F. 8" STUBOUT CONN. (WEST)
REMOVE & REPLACE:
5 L.F. CONC. CURB & GUTTER (EAST)
5 L.F. CONC. CURB & GUTTER (WEST)

N 9484.5584, E 18515.6471
MATCH LINE STA. 8+00

CONSTRUCT:
9.7 L.F. FULL-DEPTH CONC. SAWCUT
REMOVE & REPLACE:
8.5 S.Y. REINF. CONC. PVMT.
2.0 S.Y. GRAVEL PVMT.
BID SCHEDULE 2

REMOVE & REPLACE:
791 S.Y. EXIST. ASPH. PVMT.
(ENTIRE UTAH DR. QUANTITY)
BID SCHEDULE 2

CONSTRUCT:
12 L.F. FULL-DEPTH CONC. SAWCUT
REMOVE & REPLACE:
4.1 S.Y. REINF. CONC. PVMT.
BID SCHEDULE 2

BID SCHEDULE 3
FURNISH & INSTALL 8"
CURED-IN-PLACE SAN. SEW.

LEGEND
REMOVE & REPLACE ASHPALT PAVEMENT
REMOVE & REPLACE CONCRETE PAVEMENT
REMOVE & REPLACE GRAVEL PAVEMENT
REMOVE & REPLACE BRICK PAVEMENT

These plans and related specifications were prepared for construction of this specific project only. Reuse of these documents is not permitted without written authorization of Birkhoff, Hendricks, & Conway, L.L.P.

$Q_{cap.}$ = 0.49 M.G.D.
$V_{cap.}$ = 2.19 f.p.s.

BID SCHEDULE 3
800 L.F. 8" CURED-IN-PLACE SANITARY SEWER

BID SCHEDULE 2
800 L.F. 8" SDR 35 P.V.C. SANITARY SEWER
W/CLASS 'H' EMBEDMENT BY OPEN CUT

THESE DOCUMENTS ARE FOR BIDDING, CONSTRUCTION, AND PERMIT PURPOSES.
DATE: 12/14/05

STATE OF TEXAS
GARY C. HENDRICKS
85226
REGISTERED PROFESSIONAL ENGINEER

# CITY OF CELINA, TEXAS

2005 COMMUNITY DEVELOPMENT BLOCK GRANT

UTAH DRIVE & ARKANSAS DRIVE
SANITARY SEWER REPLACEMENT

## UTAH DRIVE 8" SANITARY SEWER

BIRKHOFF, HENDRICKS & CONWAY, L.L.P.
CONSULTING ENGINEERS
Dallas, Texas

| | | | |
|---|---|---|---|
| DESIGNED BY: G.C.H. | PROJECT: 2005 133 | SHEET NO. 5 OF 11 SHEETS |
| DRAWN BY: B.H. & C. | DATE: DECEMBER 2005 | |

REVISED 12/14/05 JAM 2005133-05.DWG
SCALE: 1=40 BLOCKS:
34"x22" FULL PLOT: 34x22.PCP HALF PLOT: 11x17.PCP

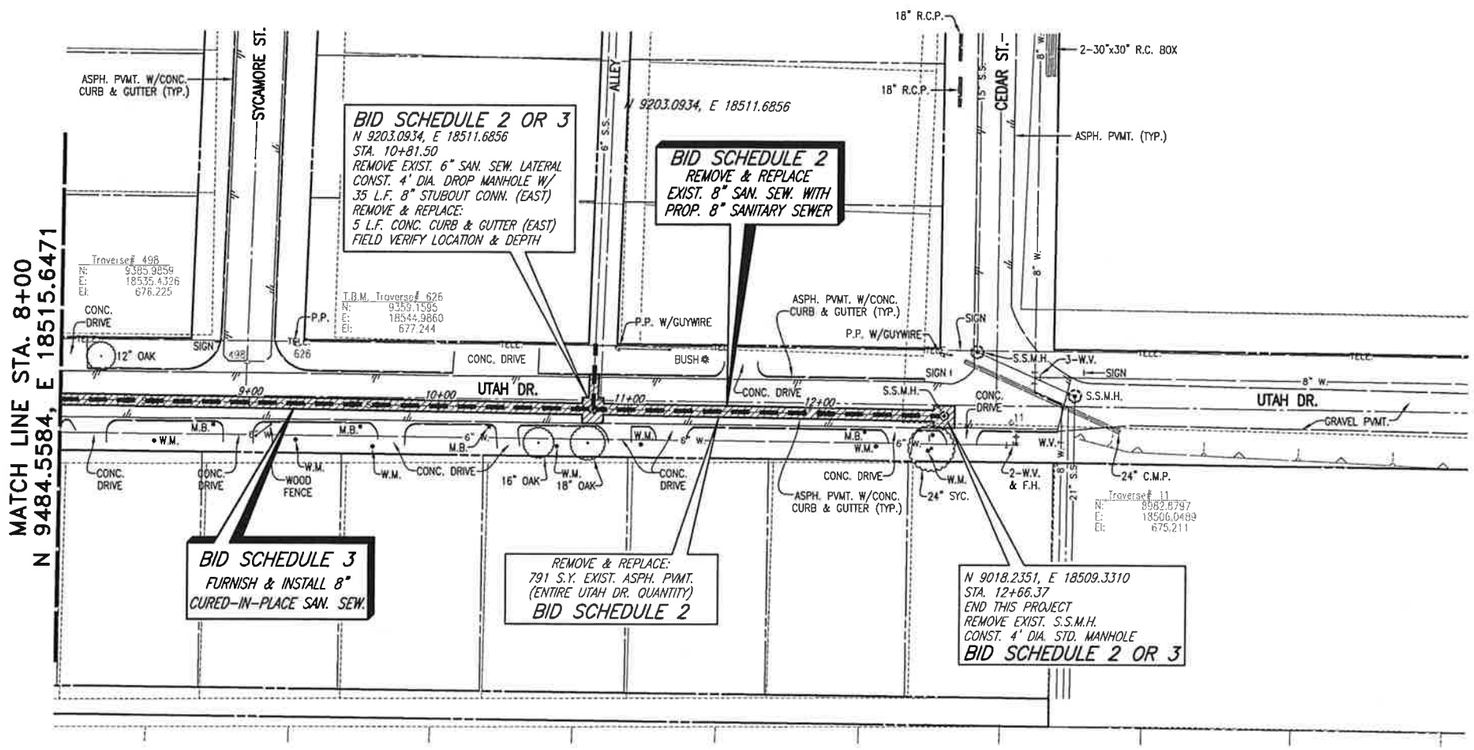


AT LOCATIONS DETERMINED BY THE CITY
FURNISH & INSTALL:
XX-4" SERVICE TEES
XXX L.F. 4" SERVICE LATERAL
XX-DOUBLE CLEANOUTS

LEGEND

- REMOVE & REPLACE ASHPALT PAVEMENT
- REMOVE & REPLACE CONCRETE PAVEMENT
- REMOVE & REPLACE GRAVEL PAVEMENT
- REMOVE & REPLACE BRICK PAVEMENT

HORIZONTAL 0 40 80 120
SCALE IN FEET

These plans and related specifications were prepared for construction of this specific project only. Reuse of these documents is not permitted without written authorization of Birkhoff, Hendricks, & Conway, L.L.P.

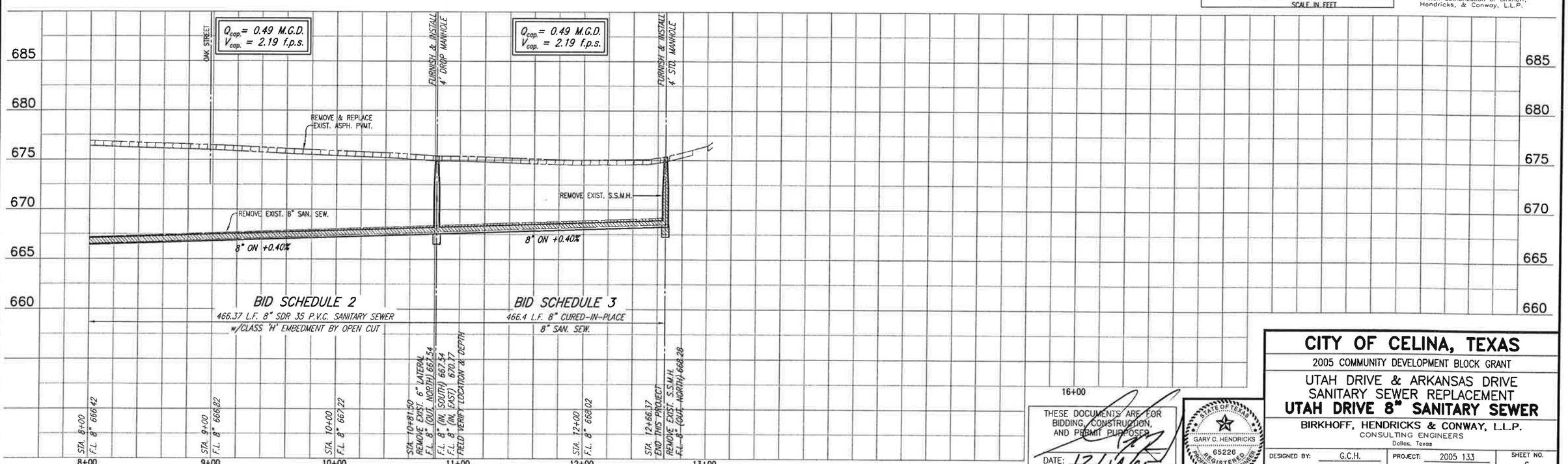


THESE DOCUMENTS ARE FOR BIDDING, CONSTRUCTION, AND PERMIT PURPOSES

DATE: 12/14/05

STATE OF TEXAS
GARY C. HENDRICKS
65226
REGISTERED PROFESSIONAL ENGINEER

# CITY OF CELINA, TEXAS

2005 COMMUNITY DEVELOPMENT BLOCK GRANT

UTAH DRIVE & ARKANSAS DRIVE
SANITARY SEWER REPLACEMENT

## UTAH DRIVE 8" SANITARY SEWER

BIRKHOFF, HENDRICKS & CONWAY, L.L.P.
CONSULTING ENGINEERS
Dallas, Texas

| | | | | |
|---|---|---|---|---|
| DESIGNED BY: G.C.H. | PROJECT: 2005 133 | SHEET NO. 6 OF 11 SHEETS |
| DRAWN BY: B.H. & C. | DATE: DECEMBER 2005 | |

REVISED 12/14/05 JAM 2005133-05.DWG SCALE: 1=40 BLOCKS:

34"x22" FULL PLOT: 34x22.PCP HALF PLOT: 11x17.PCP

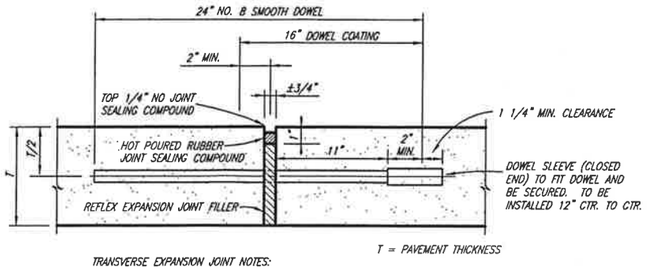


TRANSVERSE EXPANSION JOINT NOTES:

1. DOWELS AND REINFORCING BARS SHALL BE SUPPORTED BY AN APPROVED DEVICE.
2. TRANSVERSE EXPANSION JOINTS SHALL BE SPACED AT 400 FT. MAXIMUM AND AT ALL INTERSECTIONS.

## TRANSVERSE EXPANSION JOINT

NO SCALE

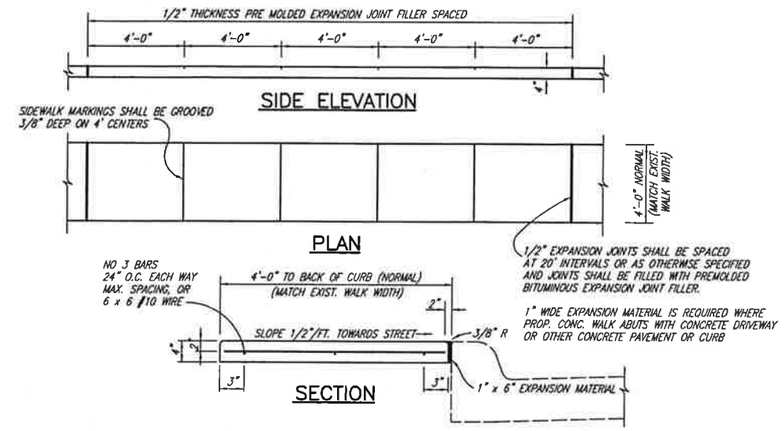


## CONCRETE SIDEWALK AT CURB

NO SCALE

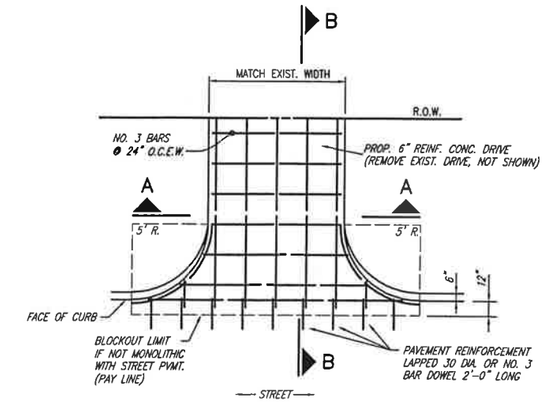


## DRIVEWAY RETURN TO STREET

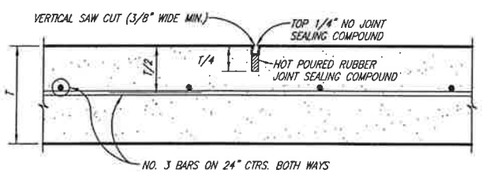


TRANSVERSE JOINTS SPACED 15 FT. C.-C. (MAX.)
LONGITUDINAL JOINTS SPACED 20 FT. C.-C. (MAX.)

## SAWED DUMMY JOINT

NO SCALE

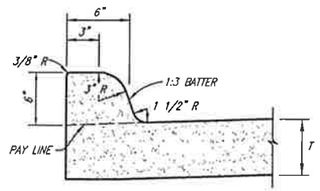


## 6" MONOLITHIC CURB

NO SCALE

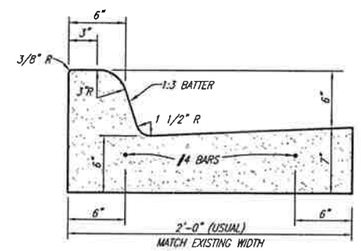


## CONCRETE CURB AND GUTTER

NO SCALE

NOTE:
FINISHED GRADING WITHIN THE R.O.W. SHALL BE BROADCAST SEEDED. WHERE PROPOSED DRIVEWAY CONSTRUCTION GOES BEYOND THE R.O.W. AND INTO PRIVATE PROPERTY, THE FINISHED GRADING SHALL BE BLOCK SODDED TO RESTORE THE LANDSCAPING TO ITS PRE-CONSTRUCTION APPEARANCE.

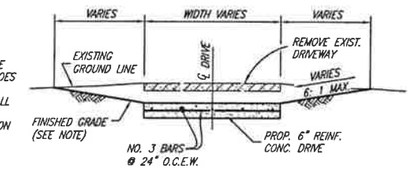


## SECTION A–A

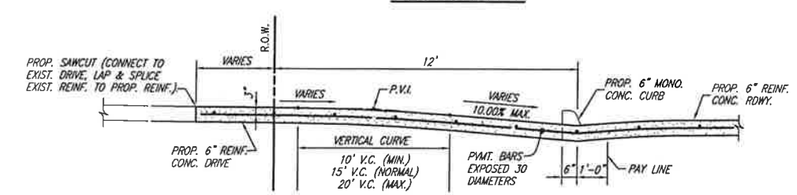


## SECTION B–B

## DRIVEWAY RETURN SECTIONS

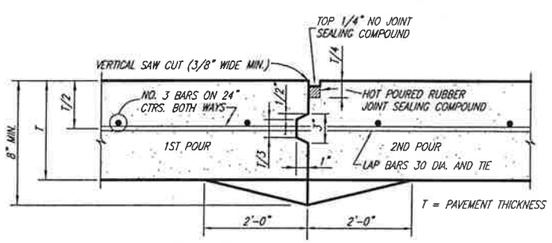


CONSTRUCTION JOINT NOTES:

1. CONTRACTOR SHALL PROTECT KEYWAY PRIOR TO SECOND POUR. IF LONGITUDINAL KEYWAY IS DAMAGED, CONTRACTOR SHALL REPAIR WITH THE USE OF LONGITUDINAL BUTT JOINT (DRILL DOWELS INTO FIRST POUR).
2. THICKENED EDGES ARE REQUIRED FOR FUTURE WIDENING ONLY.

## CONSTRUCTION JOINT

NO SCALE

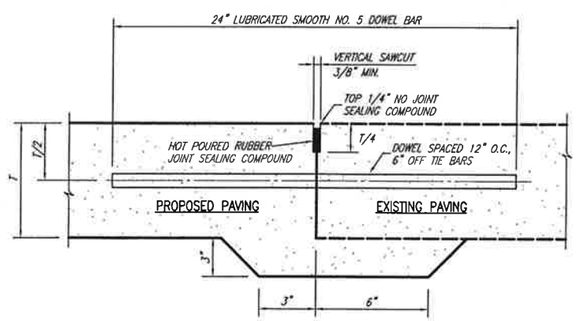


NOTE:
DOWEL BARS SHALL BE DRILLED INTO PAVEMENT HORIZONTALLY BY USE OF A MECHANICAL RIG. DRILLING BY HAND IS NOT ACCEPTABLE. PUSHING DOWEL BARS INTO GREEN CONCRETE IS NOT ACCEPTABLE.

## LONGITUDINAL BUTT JOINT

NOT TO SCALE

These plans and related specifications were prepared for construction of this specific project only. Reuse of these documents is not permitted without written authorization of Birkhoff, Hendricks, & Conway, L.L.P.

THESE DOCUMENTS ARE FOR BIDDING, CONSTRUCTION, AND PERMIT PURPOSES.
DATE: 12/14/05

STATE OF TEXAS
GARY C. HENDRICKS
65228
REGISTERED PROFESSIONAL ENGINEER

# CITY OF CELINA, TEXAS

2005 COMMUNITY DEVELOPMENT BLOCK GRANT

UTAH DRIVE & ARKANSAS DRIVE
SANITARY SEWER REPLACEMENT
**MISCELLANEOUS DETAILS**

BIRKHOFF, HENDRICKS & CONWAY, L.L.P.
CONSULTING ENGINEERS
Dallas, Texas

| | | | |
|---|---|---|---|
| DESIGNED BY: G.C.H. | PROJECT: 2005 133 | SHEET NO. 7 |
| DRAWN BY: B.H. & C. | DATE: DECEMBER 2005 | OF 11 SHEETS |

REVISED 12/13/05 JAW 2005133-07.DWG SCALE: 1=1 BLOCKS: BUTTJT, CONSTJT, CURB-GUT, DRIVE, DUMMY.IT, EXP.JT, MONOCURB, SIDEWALK_PAVING
34"x22" FULL PLOT: DAVIS34x22.CTB HALF PLOT: 11x17D.CTB

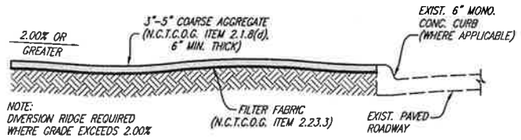


SECTION A–A

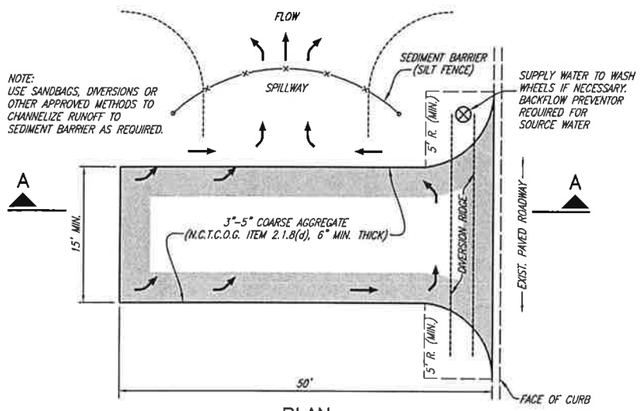


PLAN

## CONSTRUCTION ENTRANCE ROAD FOR EROSION CONTROL

NO SCALE

## EROSION CONTROL MEASURES

### STORM WATER POLLUTION PREVENTION NOTES

1. CONTRACTOR SHALL PROVIDE A STORM WATER POLLUTION PREVENTION PLAN (SWPPP) PREPARED BY A REGISTERED PROFESSIONAL ENGINEER, FOR THE ENTIRE PROJECT UTILIZING EITHER OF THE ALTERNATES SHOWN ABOVE.
2. IT SHALL BE THE CONTRACTORS RESPONSIBILITY TO IMPLEMENT THE SWPPP AND TO MAINTAIN THE SILT FENCE THROUGHOUT THE PERIOD OF CONSTRUCTION. PAYMENT SHALL BE BASED ON TWO TIMES THE ACTUAL LENGTH OF PIPE INSTALLED BY OPEN CUT.

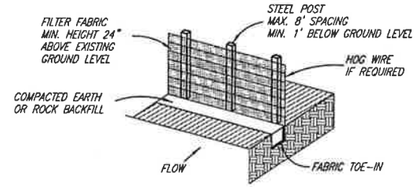


ISOMETRIC VIEW

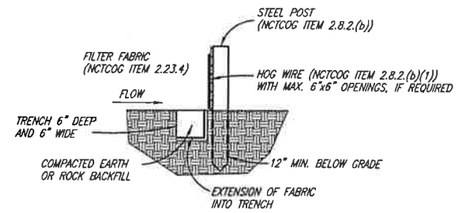


SECTION VIEW

## SILT EROSION CONTROL FENCE

NO SCALE

### SILT FENCE NOTES

1. THE CONTRACTOR SHALL INSPECT SILT FENCE WEEKLY AND AFTER MAJOR RAIN EVENTS TO ENSURE THAT THE DEVICE IS FUNCTIONING PROPERLY.
2. THE CONTRACTOR SHALL REMOVE SEDIMENT FROM BEHIND FENCE WHEN THE DEPTH OF SEDIMENT HAS BUILT UP TO ONE-THIRD THE HEIGHT OF THE FENCE ABOVE GRADE.
3. THE CONTRACTOR SHALL INSPECT THE BASE OF THE FENCE TO ENSURE THAT NO GAPS HAVE DEVELOPED AND RETRENCH AS NECESSARY.
4. THE CONTRACTOR SHALL INSPECT FENCE POSTS TO ENSURE THAT THEY ARE PROPERLY SUPPORTING THE FENCE. IF NECESSARY, THE CONTRACTOR SHALL RESET AND ADD POSTS.
5. IF FILTER FABRIC IS RIPPED, DAMAGED OR DETERIORATED, THE CONTRACTOR SHALL REPLACE IT IN ACCORDANCE

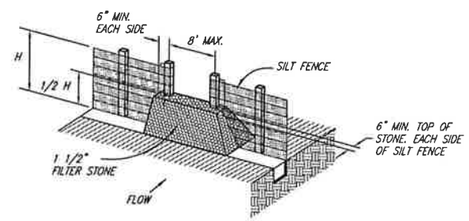


## STONE OVERFLOW STRUCTURE

NO SCALE

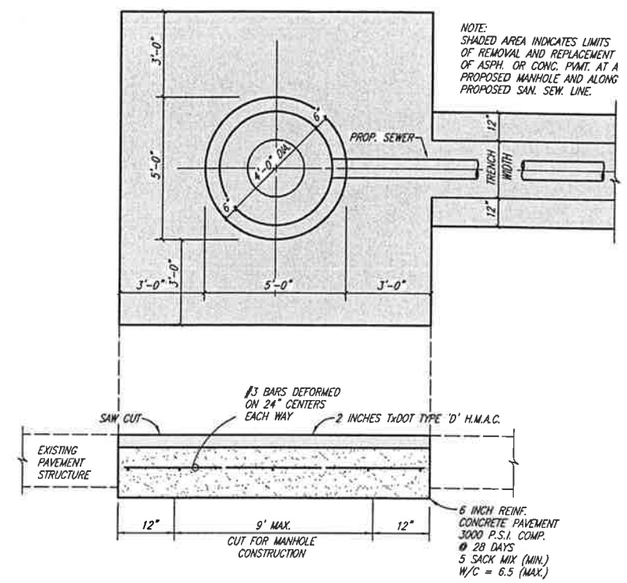


## REMOVE AND REPLACE EXISTING PAVEMENT AT PROPOSED MANHOLE

NO SCALE

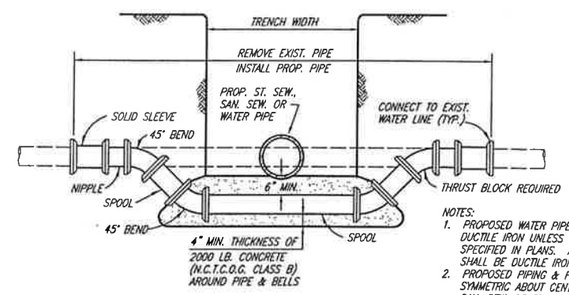


NOTES:
1. PROPOSED WATER PIPE SHALL BE DUCTILE IRON UNLESS OTHERWISE SPECIFIED IN PLANS. ALL FITTINGS SHALL BE DUCTILE IRON (M.J.–P.E.).
2. PROPOSED PIPING & FITTINGS ARE SYMMETRIC ABOUT CENTER OF PROP. SAN. SEW. OR ST. SEW. PIPE AND SHALL RETAIN TEST PRESSURES.
3. ALL THRUST BLOCKING SHALL BE SUBSIDIARY TO UNIT PRICE.
4. CROSSING OF SANITARY SEWER SHALL BE IN ACCORDANCE WITH T.N.R.C.C. REQUIREMENTS.

## WATER MAIN LOWERING

NO SCALE

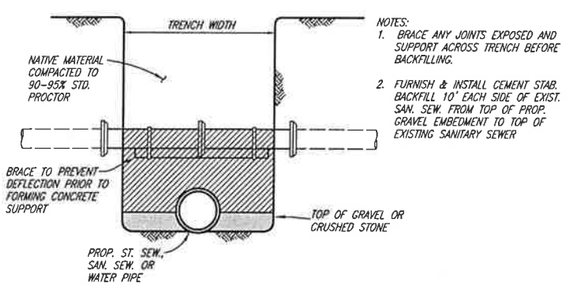


NOTES:
1. BRACE ANY JOINTS EXPOSED AND SUPPORT ACROSS TRENCH BEFORE BACKFILLING.
2. FURNISH & INSTALL CEMENT STAB. BACKFILL 10' EACH SIDE OF EXIST. SAN. SEW. FROM TOP OF PROP. GRAVEL EMBEDMENT TO TOP OF EXISTING SANITARY SEWER

## SANITARY SEWER SUPPORT

NO SCALE

These plans and related specifications were prepared for construction of this specific project only. Reuse of these documents is not permitted without written authorization of Birkhoff, Hendricks, & Conway, L.L.P.

THESE DOCUMENTS ARE FOR BIDDING, CONSTRUCTION, AND PERMIT PURPOSES.

DATE: 12/14/05

STATE OF TEXAS — GARY C. HENDRICKS — 65226 — REGISTERED PROFESSIONAL ENGINEER

# CITY OF CELINA, TEXAS

2005 COMMUNITY DEVELOPMENT BLOCK GRANT

UTAH DRIVE & ARKANSAS DRIVE
SANITARY SEWER REPLACEMENT
**MISCELLANEOUS DETAILS**

BIRKHOFF, HENDRICKS & CONWAY, L.L.P.
CONSULTING ENGINEERS
Dallas, Texas

| | | | | |
|---|---|---|---|---|
| DESIGNED BY: G.C.H. | PROJECT: 2005 133 | SHEET NO. 8 OF 11 SHEETS |
| DRAWN BY: B.H. & C. | DATE: DECEMBER 2005 | |

REVISED 12/14/05 JAM 2005133-08.DWG SCALE: 1=1 BLOCKS: BRACESUP, ENTRANCE, FENCE_TEMP, FLANGED_CONN, RRPVMT, SILT_NEW, SILT_NOTES, STONE_OVERFLOW, SWPPNOTE, WALOW

34"x22" FULL PLOT: DAVIS34x22.CTB HALF PLOT: 11x17D.CTB

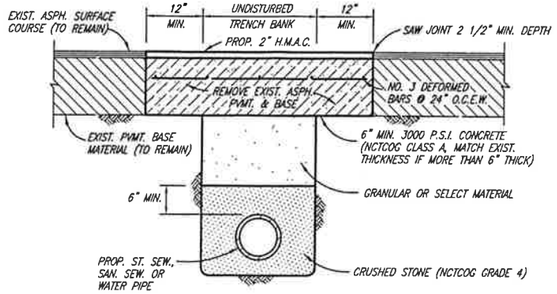


## ASPHALT STREET REPAIR

NO SCALE

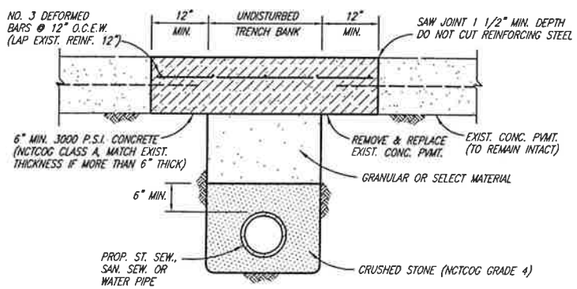


## CONCRETE STREET REPAIR

NO SCALE

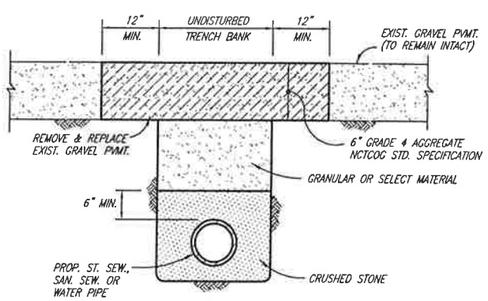


## GRAVEL STREET REPAIR

NO SCALE

## EMBEDMENT NOTES

EMBEDMENT NOTES:

1. DEPTH OF TRENCH BELOW PIPE:
   - 3" MIN. FOR 27" PIPE & SMALLER
   - 4" MIN. FOR 30" TO 60" PIPE
   - 6" MIN. FOR 66" PIPE & LARGER
2. TRENCH WIDTH ("W") SHALL BE 24" PLUS O.D. FOR PIPE > 24" I.D. AND 16" PLUS O.D. FOR PIPE ≤ 24" I.D.
3. ALL COMPACTION SHALL BE ACCOMPLISHED BY MECHANICAL MEANS.
4. NATIVE BACKFILL:
   NATIVE BACKFILL MATERIAL TO BE COMPACTED AND BROUGHT BACK TO EXISTING GRADE. THE TOP 8" IS TO BE TOP SOIL
5. SELECT MATERIAL (NCTCOG ITEM 2.1.8 (b) or (c)):
   SELECT MATERIAL SHALL BE GRAVEL, FINE ROCK CUTTINGS (LESS THAN 2" DIA.), SAND, OR SANDY LOAM. MATERIAL SHALL BE FREE OF CLAY. MECHANICALLY COMPACT IN 6" LIFTS TO 90% OF TEXAS METHOD TEX 113-E.
6. CRUSHED STONE (NCTCOG ITEM 2.1.8 (a)) FOR EMBEDMENT SHALL BE GRADE 4, STANDARD GRADATION:

| SIEVE SIZE | PERCENT RETAINED |
|---|---|
| 1 1/2" | 0% |
| 1" | 0-5% |
| 1/2" | 40-75% |
| NO. 4 | 90-100% |
| NO. 8 | 95-100% |

SELECT OR GRANULAR MATERIAL MAY BE REPLACED WITH PROCESSED MATERIAL "A". NATIVE BACKFILL MATERIAL MAY BE REPLACED WITH PROCESSED MATERIAL "B".

PROCESSED MATERIAL "A":
CONTRACTOR MAY PROCESS LIMESTONE MATERIAL EXCAVATED FROM TRENCHES FOR BACKFILL MATERIAL. MATERIAL SHALL BE FREE FROM CLAY AND ORGANIC MATERIAL AND NOT CONTAIN ANY STONE LARGER THAN TWO INCHES IN DIAMETER.

PROCESSED MATERIAL "B":
CONTRACTOR MAY PROCESS LIMESTONE MATERIAL EXCAVATED FROM TRENCHES FOR BACKFILL MATERIAL. MATERIAL MAY CONTAIN CLAY AND ORGANIC MATERIAL AND NOT CONTAIN ANY STONE LARGER THAN SIX INCHES IN DIAMETER.

NATIVE MATERIAL:
NATIVE MATERIAL SHALL NOT CONTAIN ROCKS OR CLOGS LARGER THAN 2 INCHES IN DIAMETER.

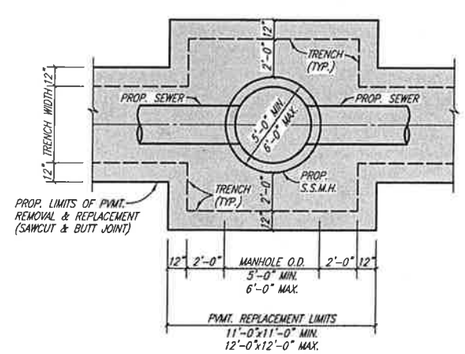


## CONSTRUCT SANITARY SEWER MANHOLE

TYPICAL PAVEMENT REPLACEMENT LIMITS

NO SCALE

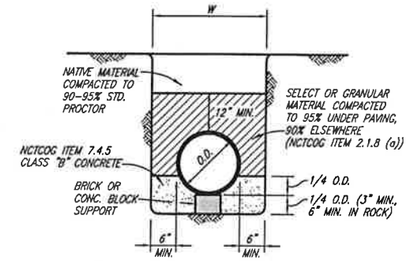


## CLASS A EMBEDMENT

CONCRETE CRADLE

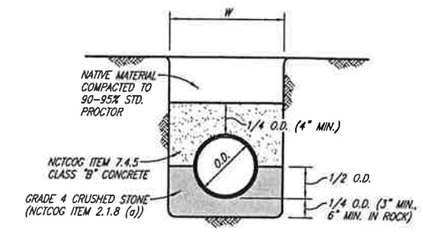


## CLASS A-1 EMBEDMENT

CONCRETE CAP

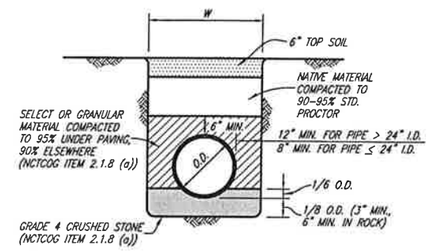


## CLASS C EMBEDMENT

STD. DUCTILE IRON WATER OR SEWER
STD. R.C.C.P. WATER
STD. STORM SEWER

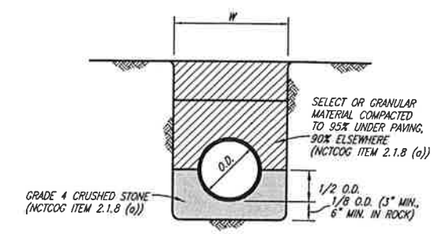


## CLASS B+ EMBEDMENT

UNDER PROPOSED PAVEMENT

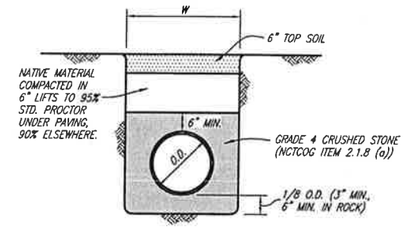


## CLASS H EMBEDMENT

STD. P.V.C. SANITARY SEWER

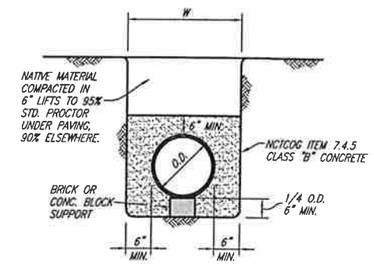


## CLASS G EMBEDMENT

CONCRETE ENCASEMENT

# CITY OF CELINA EMBEDMENT DETAILS

These plans and related specifications were prepared for construction of this specific project only. Reuse of these documents is not permitted without written authorization of Birkhoff, Hendricks, & Conway, L.L.P.

THESE DOCUMENTS ARE FOR BIDDING, CONSTRUCTION, AND PERMIT PURPOSES
DATE: 12/14/05

STATE OF TEXAS — GARY C. HENDRICKS — 65226 — REGISTERED PROFESSIONAL ENGINEER

**CITY OF CELINA, TEXAS**

2005 COMMUNITY DEVELOPMENT BLOCK GRANT

UTAH DRIVE & ARKANSAS DRIVE
SANITARY SEWER REPLACEMENT
**MISCELLANEOUS DETAILS**

BIRKHOFF, HENDRICKS & CONWAY, L.L.P.
CONSULTING ENGINEERS
Dallas, Texas

| | | | |
|---|---|---|---|
| DESIGNED BY: C.C.H. | PROJECT: 2005 133 | SHEET NO. 9 OF 10 SHEETS |
| DRAWN BY: B.H. & C. | DATE: DECEMBER 2005 | |

REVISED 12/13/05 JAM 2005133-09.DWG SCALE: 1=1 BLOCKS: ASPHPVMT, CLASSA, CLASSA1, CLASSBP, CLASSC, CLASSG, CLASSH, CONCPVMT, EMBNOTE, GRVLPVMT, NOTES2, RRPVMT1

34"x22" FULL PLOT: DAVIS34x22.CTB HALF PLOT: 11x17D.CTB

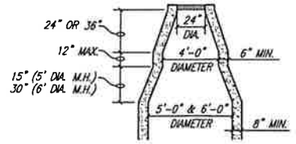


## PRECAST MANHOLE CONE TRANSITION

5' & 6' DIAMETER MANHOLES ONLY

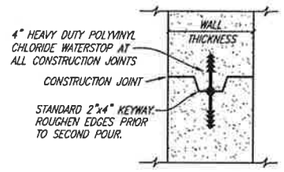


## MANHOLE CONSTRUCTION JOINT

KEYWAY WITH WATERSTOP

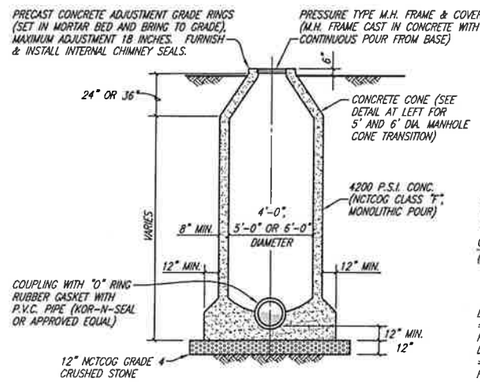


## STANDARD MANHOLE ELEVATION

4', 5' & 6' DIAMETER MANHOLES

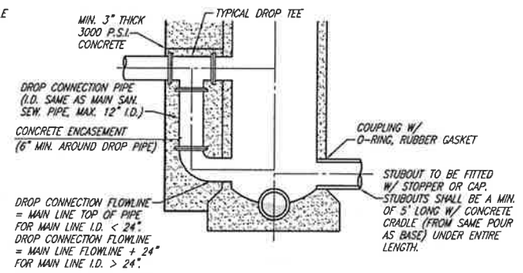


## DROP MANHOLE ELEVATION

4', 5' & 6' DIAMETER MANHOLES

## SANITARY SEWER CONCENTRIC MANHOLE (CAST IN PLACE)

NO SCALE

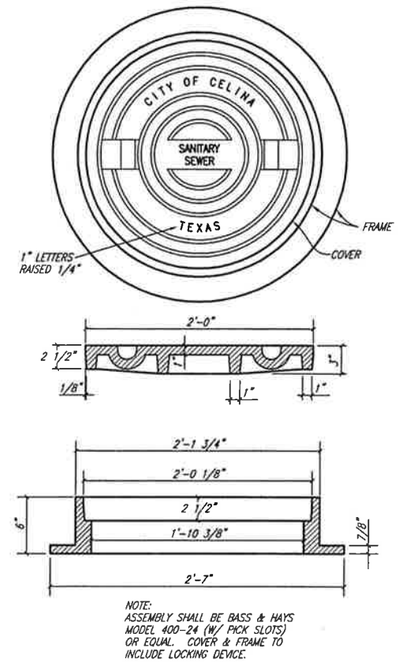


NOTE:
ASSEMBLY SHALL BE BASS & HAYS MODEL 400-24 (W/ PICK SLOTS) OR EQUAL. COVER & FRAME TO INCLUDE LOCKING DEVICE.

## MANHOLE RING AND COVER

NO SCALE

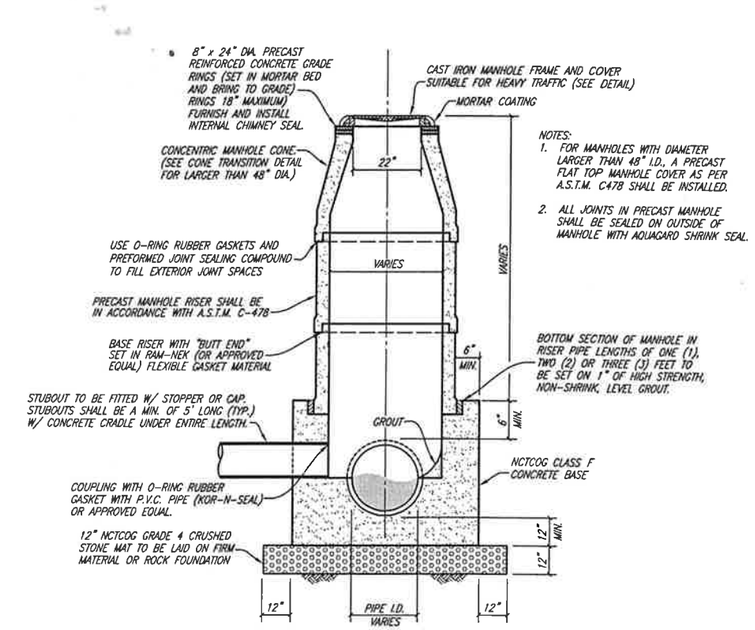


NOTES:
1. FOR MANHOLES WITH DIAMETER LARGER THAN 48" I.D., A PRECAST FLAT TOP MANHOLE COVER AS PER A.S.T.M. C478 SHALL BE INSTALLED.
2. ALL JOINTS IN PRECAST MANHOLE SHALL BE SEALED ON OUTSIDE OF MANHOLE WITH AQUAGARD SHRINK SEAL.

## PRECAST CONCRETE MANHOLE

NO SCALE

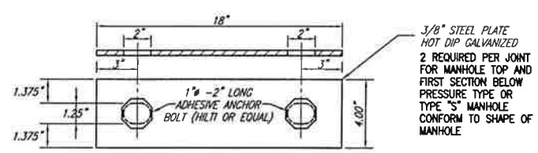


## JOINT RESTRAINER FOR PRECAST MANHOLE

SEE SPECIFICATIONS FOR PRECAST MANHOLE REQUIREMENTS

NO SCALE

### MANHOLE NOTES

NOTES FOR ALL MANHOLES:
1. MANHOLE SHALL BE PLUMB TO WITHIN 1" FOR EVERY 5 FT. OF VERTICAL DEPTH, PRECAST OR CAST IN PLACE.
2. MANHOLES OVER 12 FT. DEEP SHALL HAVE NO. 4 BARS @ 18" O.C.E.W. AND IF NOT POURED MONOLITHIC COLD JOINTS SHALL HAVE A FORMED GROOVE OR REINFORCING DOWELS FOR SHEAR PROTECTION; CONSTRUCTION JOINTS SHALL HAVE HEAVY DUTY P.V.C. WATERSTOP 9-INCHES IN THE DIRECTION PERPENDICULAR TO THE JOINT AS MANUFACTURED BY B.F. GOODRICH OR APPROVED EQUAL.
3. USE PRESSURE TYPE MANHOLE FRAME & COVER, WHERE NOTED.

NOTES FOR PRECAST MANHOLES:
1. PRECAST MANHOLES SHALL BE CONSTRUCTED IN ACCORDANCE WITH ASTM C-478.
2. FOR MANHOLES 20 FT. DEEP OR MORE USE CLASS V REINF. CONC. PIPE FOR BOTTOM 8 FT. & CLASS III R.C.P. ABOVE.
3. FURNISH & INSTALL TWO JOINT RESTRAINER STRAPS FOR EACH OF THE TOP 2 JOINTS.
4. EACH JOINT SHALL BE PROVIDED WITH AN O-RING DESIGN AND THE EXTERIOR OF EACH JOINT SHALL BE SEALED USING A PRE FORMED JOINT SEALING COMPOUND.
5. ALL WALL PENETRATIONS SHALL BE MADE UTILIZING KOR-N-SEAL RUBBER CONNECTORS, BANDS AND CLAMPS WITH HIGH STRENGTH NON GROUT.
6. ALL JOINTS IN PRECAST MANHOLES SHALL BE SEALED ON THE OUTSIDE OF THE MANHOLE WITH AQUAGUARD SHRINK SEAL.

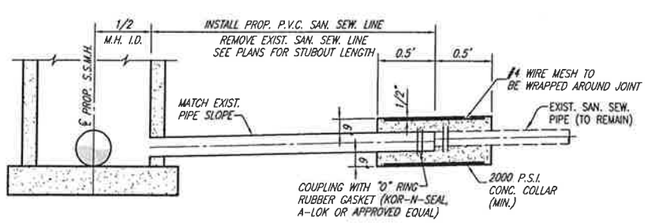


## STUBOUT CONNECTION FOR 10" LINE OR LARGER

NO SCALE

NOTE:
MATCH SOFFITS UPSTREAM OF MANHOLE
MATCH FLOW LINES DOWNSTREAM OF MANHOLE

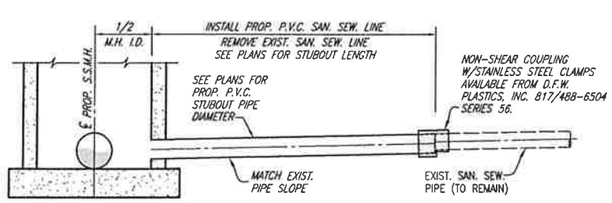


## STUBOUT CONNECTION FOR 6" & 8" LINES

NO SCALE

NOTE:
MATCH SOFFITS UPSTREAM OF MANHOLE
MATCH FLOW LINES DOWNSTREAM OF MANHOLE

THESE DOCUMENTS ARE FOR BIDDING, CONSTRUCTION, AND PERMIT PURPOSES.
DATE: 12/14/05

STATE OF TEXAS
GARY C. HENDRICKS
65226
REGISTERED PROFESSIONAL ENGINEER

These plans and related specifications were prepared for construction of this specific project only. Reuse of these documents is not permitted without written authorization of Birkhoff, Hendricks, & Conway, L.L.P.

# CITY OF CELINA, TEXAS

2005 COMMUNITY DEVELOPMENT BLOCK GRANT

UTAH DRIVE & ARKANSAS DRIVE
SANITARY SEWER REPLACEMENT
**MISCELLANEOUS DETAILS**

BIRKHOFF, HENDRICKS & CONWAY, L.L.P.
CONSULTING ENGINEERS
Dallas, Texas

| | | | |
|---|---|---|---|
| DESIGNED BY: G.C.H. | PROJECT: 2005 133 | SHEET NO. 10 OF 11 SHEETS |
| DRAWN BY: B.H. & C. | DATE: DECEMBER 2005 | |

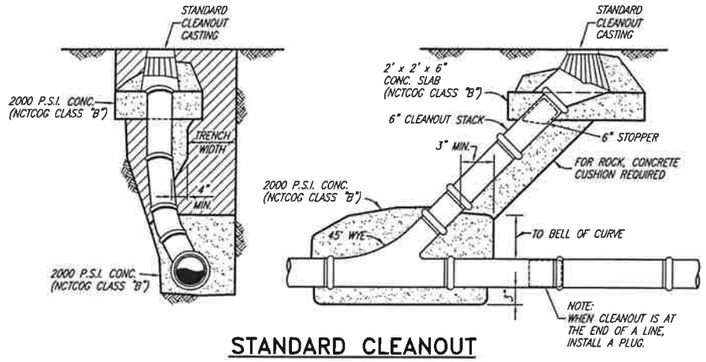


## STANDARD CLEANOUT

NO SCALE

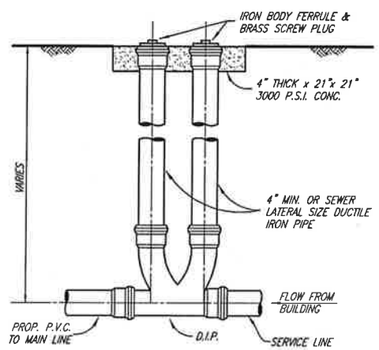


## TYPICAL TWO WAY CLEANOUT

NO SCALE

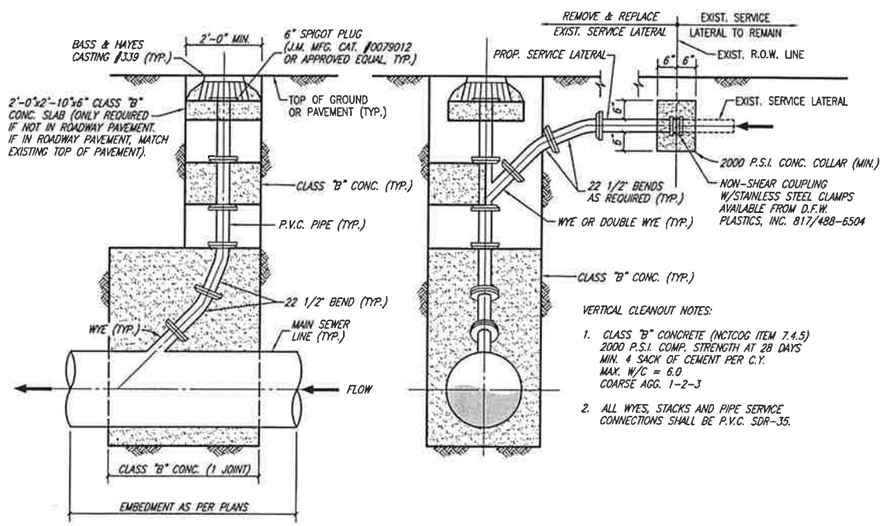


VERTICAL CLEANOUT NOTES:

1. CLASS "B" CONCRETE (NCTCOG ITEM 7.4.5) 2000 P.S.I. COMP. STRENGTH AT 28 DAYS MIN. 4 SACK OF CEMENT PER C.Y. MAX. W/C = 6.0 COARSE AGG. 1-2-3
2. ALL WYES, STACKS AND PIPE SERVICE CONNECTIONS SHALL BE P.V.C. SDR-35.

## VERTICAL CLEANOUT CONNECTION

(CONNECTION, WYE, CONCRETE, BENDS, CASTING, ETC. ALL SUBSIDIARY TO CLEANOUT)

NO SCALE

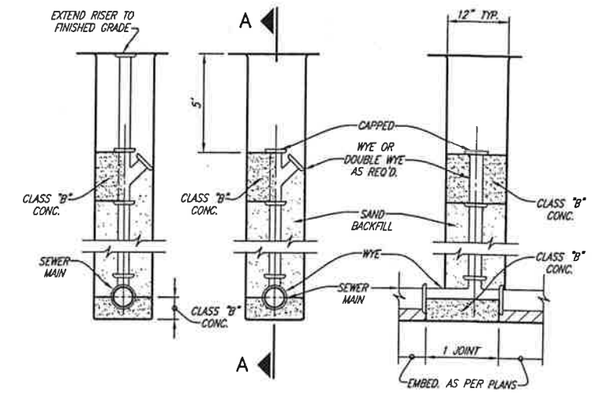


WITH CLEAN OUT

SECTION "A-A"

## DEEP CUT SANITARY SEWER CLEANOUT

NO SCALE

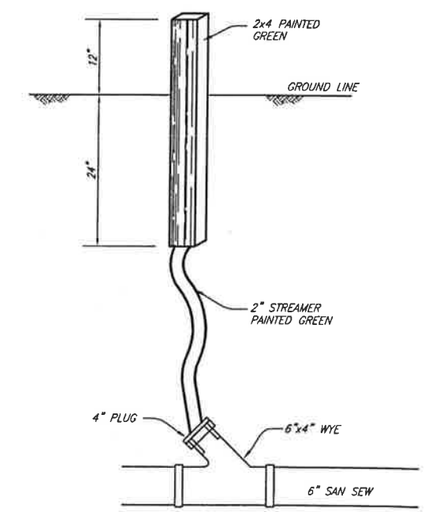


## FUTURE CLEANOUT CONNECTION

NO SCALE

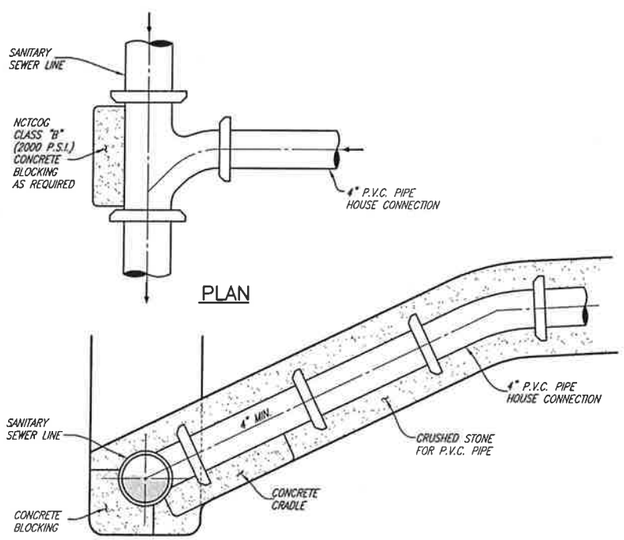


PLAN

SECTION

## SANITARY SEWER HOUSE SERVICE CONNECTION

SANITARY SEWER CLEANOUT BOOTS SHALL BE BASS & HAYS # 339 OR APPROVED EQUAL.

NO SCALE

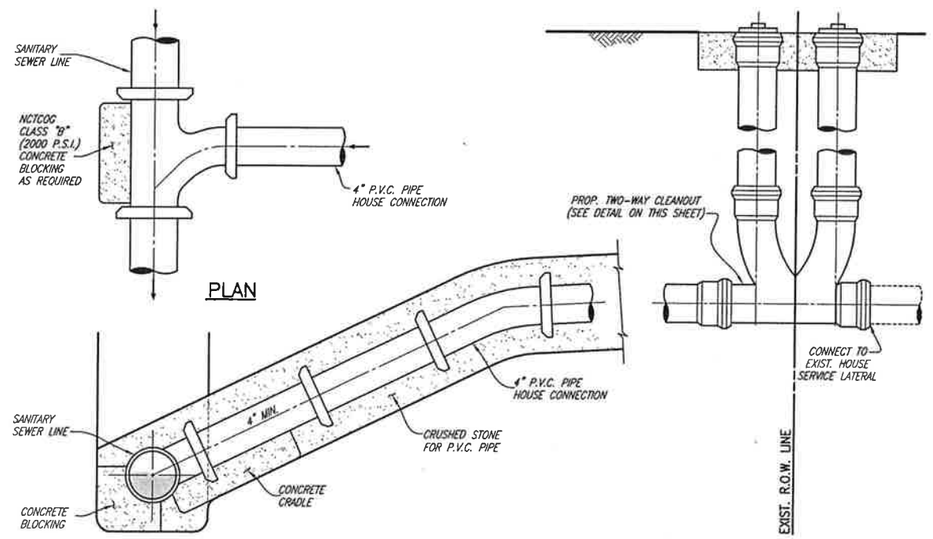


PLAN

SECTION

## SANITARY SEWER HOUSE SERVICE CONNECTION

SANITARY SEWER CLEANOUT BOOTS SHALL BE BASS & HAYS # 339 OR APPROVED EQUAL.

NO SCALE

These plans and related specifications were prepared for construction of this specific project only. Reuse of these documents is not permitted without written authorization of Birkhoff, Hendricks, & Conway, L.L.P.

THESE DOCUMENTS ARE FOR BIDDING, CONSTRUCTION, AND PERMIT PURPOSES

DATE: 12/14/05

STATE OF TEXAS — GARY C. HENDRICKS — 65226 — REGISTERED PROFESSIONAL ENGINEER

# CITY OF CELINA, TEXAS

2005 COMMUNITY DEVELOPMENT BLOCK GRANT

UTAH DRIVE & ARKANSAS DRIVE SANITARY SEWER REPLACEMENT

**MISCELLANEOUS DETAILS**

BIRKHOFF, HENDRICKS & CONWAY, L.L.P.
CONSULTING ENGINEERS
Dallas, Texas

| | | | | |
|---|---|---|---|---|
| DESIGNED BY: G.C.H. | PROJECT: 2005 133 | SHEET NO. 11 OF 11 SHEETS |
| DRAWN BY: B.H. & C. | DATE: DECEMBER 2005 | |

REVISED 12/13/05 JAM 2005133-11.DWG SCALE: 1=1 BLOCKS: 2-WAY-CO, 2WAY_SERVICE, CLEANOUT, DEEPCUT-CO, HOUSE_SERVICE, VERT-CO, WYEDET

34"x22" FULL PLOT: DAVIS34x22.CTB HALF PLOT: 11x17DPCTB