# CONSTRUCTION PLANS
# FOR
# PARKSIDE
## CITY OF CELINA
## COLLIN COUNTY, TEXAS

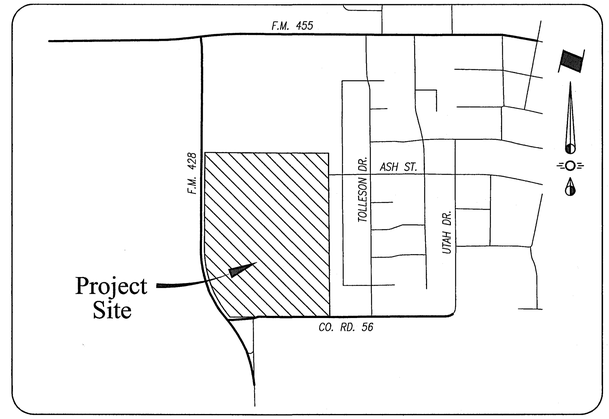


Vicinity Map
N.T.S.

### INDEX OF DRAWINGS


| | |
|---|---|
| 1-2 | Final Plat |
| 3 | General Construction Notes |
| 4-9 | Paving Plans |
| 10-11 | Drainage Area Maps |
| 12 | Inlet & Storm Sewer Calculations |
| 13-18 | Storm Sewer Plan & Profile |
| 19 | Water & Sanitary Sewer Plan |
| 19A | 6" Force Main |
| 20-21 | Sanitary Sewer Profiles |
| 22 | Erosion Control Plan |
| 23 | Erosion Control Details |
| 24-25 | Lot Grading Plans |
| 26 | Street Light & Signage Plan |
| Det-1 - Det-15 | Standard Details |


PREPARED FOR:

FORESTAR

Forestar Group
14755 Preston Road, Suite 710
Dallas, Texas 75254
Telephone (972) 341-2939
Contact: Randy McCuistion P.E.

AS-BUILT DRAWINGS
THIS DRAWING HAS BEEN REVISED TO CONFORM TO THE CONSTRUCTION RECORDS PROVIDED BY THE CONTRACTOR. ALIGNMENT AND GRADES SHOWN ON THIS DRAWING WERE NOT FIELD VERIFIED BY THE ENGINEER.

TIM C. SPIARS, P.E.

1/25/16
DATE


piars ENGINEERING
765 Custer Road, Suite 100 • Plano, TX 75075 • (972) 422-0077 • TBPE No. F-2121


STATE OF TEXAS
TIM C. SPIARS
LICENSED
PROFESSIONAL ENGINEER
1/25/16

13-157 PARKSIDE

P-201402-01


Plotted by: gaston Plot Date: 1/25/2016 10:52 AM
Drawing: G:\2013_JOBS\13-157 Park Place Celina\Phase 1\13-157 cs.dwg Saved By: Gaston Save Time: 3/6/2015 4:08:38 PM

| Curve Table | | | | | |
|---|---|---|---|---|---|
| Curve # | Length | Radius | Delta | Chord Bearing | Chord Dist. |
| C1 | 31.81' | 500.00' | 3°38'42" | N 76°19'26" E | 31.80' |
| C2 | 118.90' | 400.00' | 17°01'52" | N 65°59'09" E | 118.46' |
| C3 | 329.83' | 400.00' | 47°14'40" | S 81°05'33" W | 320.56' |
| C4 | 106.19' | 400.00' | 15°12'38" | S 82°53'26" E | 105.88' |
| C5 | 180.44' | 700.00' | 14°46'08" | S 07°19'49" W | 179.94' |
| C6 | 240.10' | 1050.00' | 13°06'07" | S 09°06'00" E | 239.58' |
| C7 | 61.18' | 400.00' | 8°45'46" | S 04°08'04" E | 61.12' |
| C8 | 106.19' | 400.00' | 15°12'38" | S 82°53'26" E | 105.88' |
| C9 | 111.71' | 50.00' | 128°00'52" | N 44°30'15" E | 89.88' |
| C10 | 111.71' | 50.00' | 128°00'52" | N 45°29'45" W | 89.88' |
| C11 | 120.96' | 50.00' | 138°36'34" | N 21°11'29" W | 93.55' |
| C12 | 224.88' | 1044.77' | 12°19'57" | S 83°30'05" W | 224.45' |
| C13 | 28.02' | 213.00' | 7°32'14" | S 76°31'48" W | 28.00' |
| C14 | 382.25' | 1070.92' | 20°27'04" | N 29°31'46" W | 380.23' |
| C15 | 144.59' | 400.00' | 20°42'39" | N 64°08'45" E | 143.80' |
| C16 | 82.99' | 375.00' | 12°40'49" | N 63°48'38" E | 82.82' |
| C17 | 130.73' | 407.50' | 18°22'53" | S 23°55'13" W | 130.17' |
| C18 | 135.78' | 392.50' | 19°49'17" | N 24°38'25" E | 135.11' |
| C19 | 47.58' | 34.00' | 80°10'39" | S 49°47'24" E | 43.79' |
| C20 | 25.19' | 18.00' | 80°10'39" | N 49°47'24" W | 23.18' |

| Line Table | | |
|---|---|---|
| Line # | Bearing | Distance |
| L1 | N 45°20'09" W | 24.10' |
| L2 | N 44°30'15" E | 16.97' |
| L3 | N 54°12'13" E | 15.43' |
| L4 | S 50°06'34" E | 13.84' |
| L5 | N 35°26'56" E | 15.29' |
| L6 | N 61°31'08" W | 13.49' |
| L7 | S 27°50'45" W | 20.59' |
| L8 | S 27°47'58" W | 20.57' |
| L9 | N 59°40'53" W | 20.91' |
| L10 | S 36°32'26" E | 12.52' |

| Line Table | | |
|---|---|---|
| Line # | Bearing | Distance |
| L11 | N 45°29'45" W | 16.97' |
| L12 | S 44°39'31" W | 23.98' |
| L13 | S 89°48'47" W | 57.52' |
| L14 | S 80°17'55" W | 84.04' |
| L15 | N 40°26'34" W | 47.31' |
| L16 | N 43°59'36" W | 13.77' |
| L17 | S 58°04'57" W | 14.54' |
| L18 | N 45°29'45" W | 14.14' |
| L19 | N 44°30'15" E | 14.14' |
| L20 | S 31°43'30" E | 13.78' |

| Line Table | | |
|---|---|---|
| Line # | Bearing | Distance |
| L21 | N 44°30'15" E | 14.14' |
| L22 | N 45°29'45" W | 14.14' |
| L23 | S 59°42'53" W | 14.14' |
| L24 | S 89°30'15" W | 74.74' |
| L25 | S 14°43'47" W | 9.40' |
| L26 | N 90°00'00" E | 3.66' |
| L27 | S 00°00'00" E | 31.00' |
| L28 | N 90°00'00" W | 31.00' |
| L29 | N 00°00'00" E | 31.00' |
| L30 | N 90°00'00" E | 9.29' |

| Line Table | | |
|---|---|---|
| Line # | Bearing | Distance |
| L31 | N 14°43'47" E | 20.86' |
| L32 | N 89°30'15" E | 77.36' |
| L33 | S 89°52'43" E | 67.22' |
| L34 | S 09°42'05" E | 15.89' |
| L35 | N 09°42'05" W | 15.89' |
| L36 | N 89°52'43" W | 67.19' |

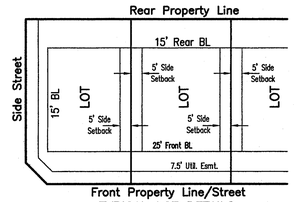


**TYPICAL LOT DETAILS**
**78 LOTS TO PD-29 STANDARDS**
**ON 50' R.O.W. (w/NO ALLEY ACCESS)**
**(78 Lots/22.788 Acres = 3.42 units/acres)**
**(TYPICAL LOT SIZE = 50'X120') (TYPICAL PAD SIZE = 40'X80')**

| LEGEND (Not all items may be applicable) | |
|---|---|
| o | 5/8" IRON ROD FOUND, UNLESS OTHERWISE NOTED |
| IRS | 1/2" IRON ROD SET WITH YELLOW CAP STAMPED "SPIARSENG" |
| IRF | IRON ROD FOUND |
| CIRF | CAPPED IRON ROD FOUND |
| CM | CONTROL MONUMNET |
| DE | DRAINAGE EASEMENT |
| DUE | DRAINAGE AND UTILITY EASEMENT |
| UE | UTILITY EASEMENT |
| WE | WATER EASEMENT |
| SSE | SANITARY SEWER EASEMENT |
| STE | STREET EASEMENT |
| WME | WALL MAINTENANCE EASEMENT |
| SW & LME | SCREENING WALL & LANDSCAPE MAINTENANCE EASEMENT |
| (BTP) | BY THIS PLAT |
| R.O.W. | RIGHT-OF-WAY |
| Min. FF | MINIMUM FINISH FLOOR ELEVATION |
| BL | BUILDING LINE |
| | STREET NAME CHANGE |
| C/L | CENTERLINE |
| Ⓐ | BLOCK DESIGNATION |
| DRCCT | DEED RECORDS, COLLIN COUNTY, TEXAS |
| OPRCCT | OFFICIAL PUBLIC RECORDS, COLLIN COUNTY, TEXAS |

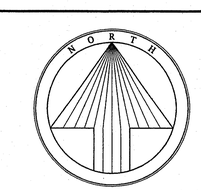


60 0 30 60 120
1 inch = 60 ft.

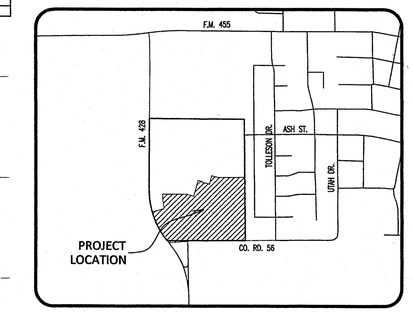


LOCATION MAP
1" = 1000'

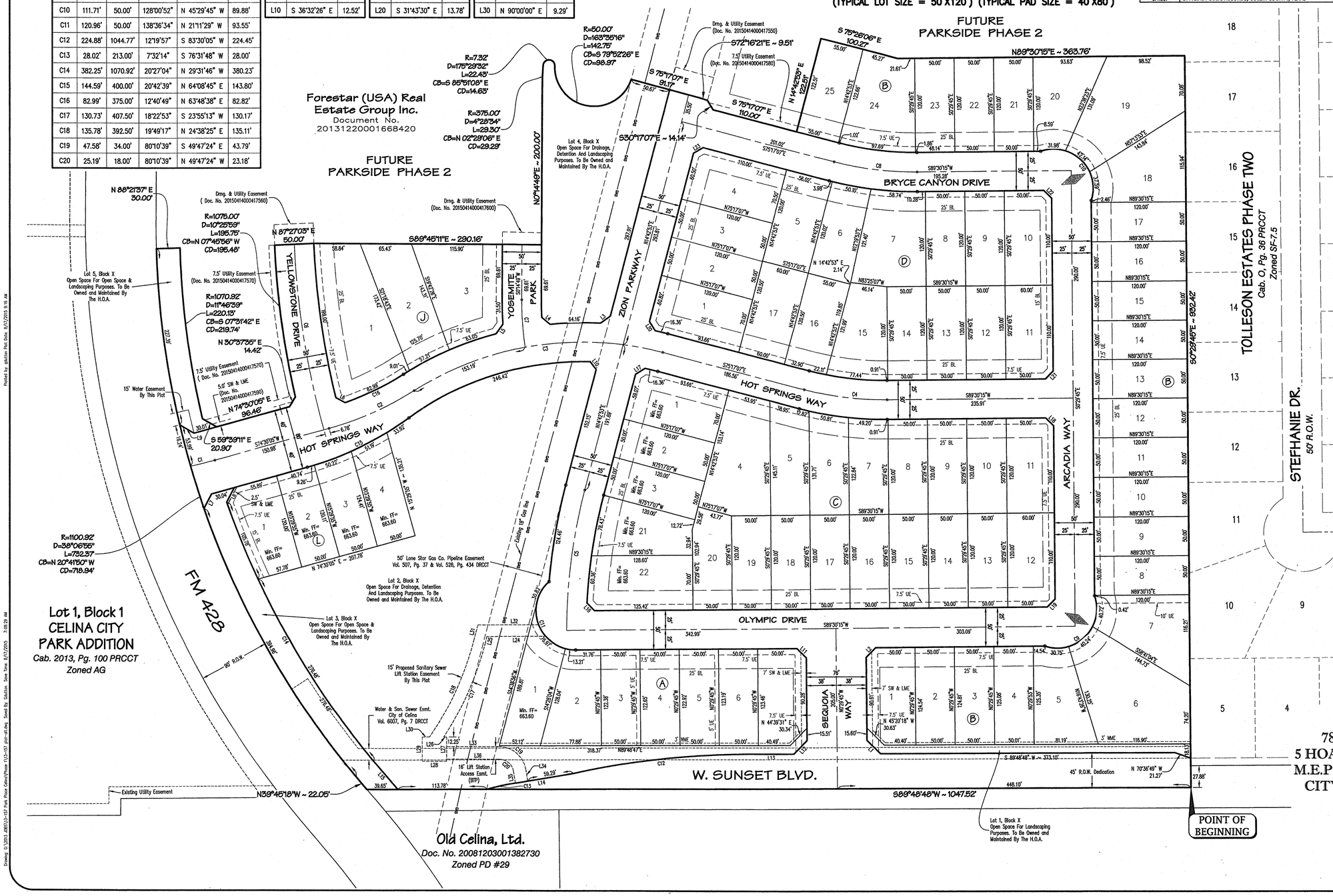


NOTES:

1. Selling a portion of this addition by metes and bounds is a violation of city ordinance and state law, and is subject to fines and withholding of utilities and building permits.
2. Basis of bearing, horizontal and vertical position derived from the Texas WDS RTK Network–Texas State Plane Coordinate System, NAD83, North Central Zone (4202).
3. No part of the subject land is located in a 100–year Flood Plain or in an identified "flood prone area," as defined pursuant to the Flood Disaster Protection Act of 1973, as amended, as reflected by Flood Insurance Rate Map Panels 48085C0110J, dated June 2, 2009. The property is located in Zone "X" (areas determined to be outside the 500–year floodplain).
4. Secondary Story Window Restrictions: The homes adjacent to the eastern property boundary that have a second story shall not have windows on the second story facing east toward the homes and yards of the adjacent properties.
5. All open space/common area lots are to be dedicated to the HOA and the HOA will be responsible for the maintenance and upkeep of said lots.
6. Sidewalks must be installed by the Developer along all open space and common area lots.
7. The City of Celina will not exclude other utilities from dedicated water & sewer easements but reserves the right to assign the locations of other utilities in available portions of said easements. Franchise utilities shall be placed just inside the outside edge of the right–of–way (outside of sidewalk).
8. A fence may be constructed along lot lines within a surface drainage easement provided the fence does not obstruct surface drainage.
9. All lot corners and boundary corners will be set upon completion of construction with 1/2" iron rods with plastic caps stamped "SPIARSENG". The centerline of the street rights–of–way will be monumented with a scribed "X" in concrete at the P.C.'s and P.T.'s and intersection points.
10. All water and sanitary sewer easements to be dedicated to the City of Celina.
11. All SW & LME to be maintained by the HOA.

Filed and Recorded
Official Public Records
Stacey Kemp, County Clerk
Collin County, TEXAS
09/28/2015 03:25:06 PM
$37.00 C290RL
2015092801002160

2015-503

CITY PROJECT NO. P–201402–01
**FINAL PLAT**

# PARKSIDE PHASE 1

## 78 RESIDENTIAL LOTS DEVELOPED & 5 HOA LOTS BEING 22.955 ACRES OUT OF THE M.E.P. & P.R.R. CO. SURVEY ABSTRACT NO. 644 CITY OF CELINA, COLLIN COUNTY, TEXAS


**Owner/Applicant**
Forestar Group
14755 Preston Road, Ste. 710
Dallas, Texas 75254
Telephone (972) 341–2939
Contact: Thomas H. Burleson

**Engineer/Surveyor**
Spiars Engineering, Inc. TBPE No. F–2121
765 Custer Road, Suite 100
Plano, Texas 75075
Telephone (972) 422–0077
Contact: Tim C. Spiars


Scale 1"=60' March 17, 2015 SEI Job# 13–157

## OWNERS CERTIFICATE

WHEREAS Forestar (USA) Real Estate Group Inc., are the owners of a tract situated in the M.E.P. & P.R.R. Survey, Abstract No. 644, City of Celina, Collin County, Texas, the subject tract being a portion of a tract conveyed to Forestar (USA) Real Estate Group, Inc. according to the deed recorded in Document No. 20131220001668420 of the Official Public Records, Collin County, Texas (OPRCCT), the subject tract being more particularly described as follows:

BEGINNING at a 1/2" iron rod with plastic cap stamped "SPIARSENG" set in County Road 56, a public right-of-way, for the southeast corner of said Forestar tract;

THENCE S 89°48'48" W, 1047.52 feet along said road to a 1/2" iron rod found at the intersection of said County Road 56 with the east line of Farm to Market Road 428, a 90 foot public right-of-way, for the southwest corner of said Forestar tract;

THENCE along the east line of Farm to Market Road 428, the following:

N 39°45'18" W, 22.05 feet to a 1/2" iron rod found;

And around a tangent curve to the right having a central angle of 38°06'55", a radius of 1100.92 feet, a chord of N 20°41'50" W – 718.94 feet, an arc length of 732.37 feet to a 1/2" iron rod with plastic cap stamped "SPIARSENG" set;

THENCE departing the east line of Farm to Market Road 428, the following:

N 88°21'37" E, 30.00 feet to a 1/2" iron rod with plastic cap stamped "SPIARSENG" set;

A non-tangent curve to the left having a central angle of 11°46'39", a radius of 1070.92 feet, a chord of S 07°31'42" E – 219.74 feet, an arc length of 220.13 feet to a 1/2" iron rod with plastic cap stamped "SPIARSENG" set;

S 59°39'11" E, 20.90 feet to a 1/2" iron rod with plastic cap stamped "SPIARSENG" set;

N 74°30'05" E, 96.46 feet to a 1/2" iron rod with plastic cap stamped "SPIARSENG" set;

N 30°37'35" E, 14.42 feet to a 1/2" iron rod with plastic cap stamped "SPIARSENG" set;

A non-tangent curve to the right having a central angle of 10°25'59", a radius of 1075.00 feet, a chord of N 07°45'56" W – 195.48 feet, an arc length of 195.75 feet to a 1/2" iron rod with plastic cap stamped "SPIARSENG" set;

N 87°27'03" E, 50.00 feet to a 1/2" iron rod with plastic cap stamped "SPIARSENG" set;

S 89°45'11" E, 290.16 feet to a 1/2" iron rod with plastic cap stamped "SPIARSENG" set;

N 00°14'49" E, 200.00 feet to a 1/2" iron rod with plastic cap stamped "SPIARSENG" set;

A tangent curve to the right having a central angle of 04°28'34", a radius of 375.00 feet, a chord of N 02°29'06" E – 29.29 feet, an arc length of 29.30 feet to a 1/2" iron rod with plastic cap stamped "SPIARSENG" set;

A non-tangent curve to the right having a central angle of 175°29'32", a radius of 7.32 feet, a chord of S 85°51'08" E – 14.63 feet, an arc length of 22.43 feet to a 1/2" iron rod with plastic cap stamped "SPIARSENG" set;

A non-tangent curve to the left having a central angle of 163°35'16", a radius of 50.00 feet, a chord of S 79°52'26" E – 98.97 feet, an arc length of 142.75 feet to a 1/2" iron rod with plastic cap stamped "SPIARSENG" set;

S 75°17'07" E, 91.17 feet to a 1/2" iron rod with plastic cap stamped "SPIARSENG" set;

S 72°16'21" E, 9.51 feet to a 1/2" iron rod with plastic cap stamped "SPIARSENG" set;

S 30°17'07" E, 14.14 feet to a 1/2" iron rod with plastic cap stamped "SPIARSENG" set;

S 75°17'07" E, 110.00 feet to a 1/2" iron rod with plastic cap stamped "SPIARSENG" set;

N 14°42'53" E, 122.51 feet to a 1/2" iron rod with plastic cap stamped "SPIARSENG" set;

S 75°26'06" E, 100.27 feet to a 1/2" iron rod with plastic cap stamped "SPIARSENG" set;

And N 89°30'15" E, 363.76 feet to a 1/2" iron rod with plastic cap stamped "SPIARSENG" set on the west line of Tolleson Estates Phase Two, an addition recorded in Cabinet O, Page 36, Plat Records, Collin County, Texas;

THENCE S 00°29'45" E, along the west line thereof, passing at 904.55 feet the southwest corner of said addition, and continuing into said County Road 56 a total distance of 932.42 feet to the POINT OF BEGINNING with the subject tract containing 999,924 square feet or 22.955 acres of land.

## GENERAL NOTES:

1. Selling a portion of this addition by metes and bounds is a violation of city ordinance and state law, and is subject to fines and withholding of utilities and building permits.

2. The undersigned does hereby covenant and agree that he or she or they shall construct upon the fire lane easements, as dedicated as shown hereon, a hard surface in accordance with the City of Celina's paving standards for fire lane, and that he or she or they shall maintain the same in a state of good repair at all times and keep the same free and clear of any structures, fences, trees, shrubs, or other improvements or obstruction, including but not limited to the parking of motor vehicles, trailers, boats or other impediments to the accessibility of fire apparatus. The maintenance of paving on the fire lane easements is the responsibility of the owner, and the owner shall post and maintain appropriate signs in conspicuous places along such fire lanes, stating "Fire Lane, No Parking." The local law enforcement agency(s) is hereby authorized to enforce parking regulations within the fire lanes, and to cause such fire lanes and utility easements to be maintained free and unobstructed at all times for Fire Department and emergency use.

3. The undersigned does hereby covenant and agree that the access easement may be utilized by any person or the general public for ingress and egress to public vehicular and pedestrian use and access, and for Fire Department and emergency use in, along, upon and across said premises, with the right and privilege at all times of the City of Celina, its agents, employees, workmen and representatives having ingress, egress, and regress in, along, upon and across said premises.

4. Applicable for lots with drainage easements only
   This plat is hereby adopted by the Owners and approved by the City of Celina (Called "City") subject to the following conditions which shall be binding upon the Owners, their heirs, grantees, successors and assigns: The portion of Parkside Phase 1, as shown on the plat is called "Drainage and Detention Easement." the Drainage and Detention Easement within the limits of this addition, will remain accessible at all times and will be maintained in a safe and sanitary condition by the owners of the lot or lots that are traversed by or adjacent to the Drainage and Detention Easement. The City will not be responsible for the maintenance and operation of said Easement or for any damage to private property or person that results from conditions in the Easement, or for the control of erosion. No construction of any type of building, fence or any other structure within the Drainage and Detention Easement, as herein above defined shall be permitted, unless approved by the City Engineer. Provided, however, it is understood that in the event it becomes necessary for the City to erect or consider erecting any type of drainage structure in order to improve the storm drainage that may be occasioned by drainage in or adjacent to the subdivision, then in such event, the city shall have the right to enter upon the Drainage and Detention Easement at any point, or points, to investigate, survey or to erect, construct and maintain any drainage facility deemed necessary for drainage purposes. Each property owner shall keep the Drainage and Detention Easement clean and free of debris, silt, and any substance which would result in unsanitary conditions or obstruct the flow of water, and the city shall have the right of ingress and egress for the purpose of inspection and supervision of maintenance work by the property owner to alleviate any undesirable conditions which may occur. The natural drainage through the Drainage and Detention Easement is subject to storm water overflow and natural bank erosion to an extent which cannot be definitely defined. The City shall not be held liable for any damages of any nature resulting from the failure of any structure or structures, within the easement.

## OWNERS DEDICATION

### NOW THEREFORE KNOW ALL MEN BY THESE PRESENTS:

That Forestar (USA) Real Estate Group Inc., acting herein by and through his (its) duly authorized officer(s) does hereby adopt this plat designating the herein above described property as **PARKSIDE PHASE 1**, an addition to the City of Celina, Texas, and does hereby dedicate, in fee simple to the public use forever, the streets, rights-of-way, and other public improvements shown thereon. The streets and alleys, if any, are dedicated for street purposes. The easements and public use areas, as shown, are dedicated, for the public use forever, for the purposes indicated on this plat. No buildings, fences, trees, shrubs or other improvements or growths shall be constructed or placed upon, over or across the easements as shown, except that landscape improvements may be placed on landscape easements, if approved by the City Council of the City of Celina. In addition, utility easements may also be used for the mutual use and accommodation of all public utilities desiring to use or using the same unless the easement limits the use to particular utilities, said use by public utilities being subordinate to the public's and City of Celina's use thereof. The City of Celina and public utility entities shall have the right to remove and keep removed all or parts of any buildings, fences, trees, shrubs or other improvements or growths which may in any way endanger or interfere with the construction, maintenance, or efficiency of their respective systems in said easements. The City of Celina and public utility entities shall at all times have the full right ingress and egress to or from their respective easements for the purpose of constructing, reconstructing, inspecting, patrolling, maintaining, reading meters, and adding to or removing all or parts of their respective systems without the necessity at any time procuring permission from anyone.

This plat approved subject to all platting ordinances, rules, regulations, and resolutions of the City of Celina, Texas.

WITNESS, my hand, this the 17th day of AUGUST, 2015.

Forestar (USA) Real Estate Group, Inc.
a Delaware Corporation

By: [signature]
Thomas H. Burleson
Executive Vice President, Owner

**STATE OF TEXAS §**
**COUNTY OF DALLAS §**

BEFORE ME, the undersigned, a Notary Public in and for The State of Texas, on this day personally appeared Thomas H. Burleson, known to me to be the person and officer whose name is subscribed to the foregoing instrument, and acknowledged to me that he executed the same for the purposes and considerations therein expressed and in the capacity therein stated.

GIVEN UNDER MY HAND AND SEAL OF OFFICE this the 17th day of August, 2015.

[signature]
Notary Public, State of Texas

LAUREN ADAMS
Notary Public
STATE OF TEXAS
Comm. Expires 10-17-2017

## SURVEYOR'S CERTIFICATE

That I, Darren K. Brown, of Spiars Engineering, Inc., do hereby certify that I prepared this plat from an actual and accurate survey of the land and that the corner monuments shown thereon as "set" were properly placed under my personal supervision in accordance with the Subdivision Ordinance of the City of Celina.

Dated this the 17 day of August, 2015.

[signature]
DARREN K. BROWN, R.P.L.S. NO. 5252

STATE OF TEXAS
REGISTERED
DARREN K. BROWN
5252
PROFESSIONAL
LAND SURVEYOR

**STATE OF TEXAS §**
**COUNTY OF COLLIN §**

BEFORE ME, the undersigned, a Notary Public in and for The State of Texas, on this day personally appeared Darren K. Brown, known to me to be the person and officer whose name is subscribed to the foregoing instrument, and acknowledged to me that he executed the same for the purposes and considerations therein expressed and in the capacity therein stated.

GIVEN UNDER MY HAND AND SEAL OF OFFICE this the 17 day of August, 2015

[signature]
Notary Public, State of Texas

JOY L. O'BRIEN
Notary Public, State of Texas
My Commission Expires
March 01, 2016

## FINAL PLAT

Approved by the City of Celina for filing at the office of the County Clerk of Collin County, Texas

RECOMMENDED BY: Planning and Zoning Commission, City of Celina, Texas

[signature] Signature of Chairperson — 3-24-15 Date of Recommendation

APPROVED BY: City Council, City of Celina, Texas

[signature] Signature of Mayor — 04/14/2015 Date of Approval

THE CITY OF CELINA TEXAS

ATTEST:

Vicki Faulkner — City Secretary — 08/28/2015 Date

This property is located in the corporate limits of the City of Celina, Collin County, Texas.

[signature] Mayor, City of Celina — 08/28/2015 Date

ATTEST:

Vicki Faulkner — City Secretary, City of Celina — 08/28/2015 Date

Filed and Recorded
Official Public Records
Stacey Kemp, County Clerk
Collin County, TEXAS
08/28/2015 03:25:06 PM
$37.00 CJAMAL
20150828010003160

2015-504

[signature] Stacey Kemp

CITY PROJECT NO. P-201402-01

**FINAL PLAT**

# PARKSIDE PHASE 1

**78 RESIDENTIAL LOTS DEVELOPED & 5 HOA LOTS BEING 22.955 ACRES OUT OF THE M.E.P. & P.R.R. CO. SURVEY ABSTRACT NO. 644 CITY OF CELINA, COLLIN COUNTY, TEXAS**

| Owner/Applicant | Engineer/Surveyor |
|---|---|
| Forestar Group | Spiars Engineering, Inc. TBPE No. F-2121 |
| 14755 Preston Road, Ste. 710 | 765 Custer Road, Suite 100 |
| Dallas, Texas 75254 | Plano, Texas 75075 |
| Telephone (972) 341-2939 | Telephone (972) 422-0077 |
| Contact: Thomas H. Burleson | Contact: Tim C. Spiars |

March 17, 2015 SEI Job# 13-157

Plotted by: gdutton Plot Date: 8/17/2015 8:39 AM
Drawing: G:\2013 JOBS\13-157 Park Place Celina\Phase 1\13-157 plat-alt.dwg Saved By: Gdutton Save Time: 8/17/2015 7:08:29 AM

City of Celina
CONSTRUCTION GENERAL NOTES -Revised 8/12/2013

GENERAL

1. All construction shall be in accordance with the latest revision of the North Central Texas Council of Governments "Standard Specifications for Public Works Construction" including the Standard Drawings therein and the City of Celina's addendum thereto. Contractor shall have at least one set of approved Engineering Plans and Specifications on-site at all times.

2. Before beginning construction, the contractor shall prepare a construction sequence schedule. The construction schedule shall be such that there is minimum interference with traffic along or adjacent to the project.

3. Construction may not begin earlier than 7:00 A.M. on weekdays nor continue after dark without permission from the City of Celina. Construction on holidays and Saturday must be approved two days in advance. A fee of $300.00 a day for working on holidays and Saturday will be accessed payable to the city before work is performed. Work may not begin before 8:00 A.M. on holidays and Saturday and work on Sunday is prohibited without special permission and payment of fees.

4. Utilities shown on the plans were taken from field surveys and information provided by the utility companies. The completeness and the accuracy of this data is not guaranteed.

The contractor is responsible for verifying the location of all underground utilities and structures and protecting them from damage during construction.

It will be the responsibility of each contractor to protect all existing public and private utilities throughout the construction of this project. Contractor shall contact the appropriate utility companies for line location prior to commencement of construction and shall assume full liability to those companies for any damages caused to their facilities.

| | |
|---|---|
| DIG TESS | 800-DIG-TESS |
| GCEC-TELECOM | 903-482-7274 |
| GCEC-ELECTRIC | 903-821-3007 |
| AT&T | 972-569-3013 |
| ATMOS ENERGY | 972-881-4161 |
| ATMOS ENERGY | 214-341-9900 |
| CROSSTEX ENERGY | 817-570-6753 |
| ONEOK | 903-257-6594 |
| COSERV-ELEC | 940-321-7800 |
| COSERV-GAS | 940-321-7800 |
| CITY OF CELINA | 972-382-2682 |
| TOWN OF PROSPER | 972-347-9969 |
| MARILEE SUD | 972-382-3222 |
| GRANDE | 972-410-0583 |
| SUDDEN LINK | 469-853-0486 |

5. Work may not be backfilled or covered until the City has inspected it.

6. Material testing shall be performed by an independent testing laboratory and paid for by the Contractor. The following material tests shall be provided by the Contractor:

a. Embankment - One soil density test shall be performed at each location for each 500 C.Y. of backfill placed.
b. Pavement Sub grade - One gradation test (where lime stabilized) and one soil density test shall be performed for each 300 linear feet of pavement unless otherwise noted. Gradations must pass 100% through a 1 ½"sieve and 60% through a #4 sieve.
c. Utility Trench Backfill - One soil density test shall be performed at 300 feet intervals or as directed by the Inspector.
d. Concrete Tests:
(1). Compressive Strength - Four test cylinders shall be taken from a representative portion of the concrete being placed for every 150-cubic yards of concrete pavement placed, but in no case shall less than 2 sets of cylinders be taken from any one day's placement.)
(2). Air, slump, and temperature tests shall be taken for every set of cylinders made. Concrete with a temperature above 95° F will be rejected.
(3). Additional cylinders and/or tests may be required at the Inspector's discretion.

The City shall select the location and depth of each soil density test unless otherwise directed.

7. All excavation on the project is unclassified.

8. Temporary erosion control shall be used to minimize the spread of silt and mud from the project on to existing streets, alleys, drainage ways and public and private property. Temporary erosion controls may include silt fences, rock check dams, stabilized construction entrances, straw bales, berms, dikes, swales, strips of undisturbed vegetation, check dams and other methods as required by the City Manager or his representative and shall conform to the Storm Water Quality Best Management Practices for Construction Activities as published by the North Central Texas Council of Governments and the City of Celina Erosion and Sediment Control Manual.

9. Finished slopes on public rights-of-way and easements shall not be steeper than 4:1. All slopes steeper than 6:1 shall be covered with erosion control matting and are hydro mulched and maintained by the contractor until grass covers all parts of the slope.

10. The contractor shall maintain two-way traffic at all times along the project.

11. Remove, salvage and replace all street and traffic control signs, which may be damaged by the construction of the project.

12. All trenching and excavation shall be performed in accordance with OSHA standards. Trench safety design will be the responsibility of the Contractor. Contractor shall submit a trench safety design approved by a professional engineer to the City for review prior to the start of any underground utility construction.

PAVING

1. All embankments shall be compacted to 95% Standard Proctor density.

2. All streets and alleys shall be placed on lime stabilized sub grade with a lime content of not less than 7% or as approved by city engineer.

3. The minimum 28 day compressive strength of concrete street paving shall not be less than 3600 psi and shall be air entrained. Water may not be applied to the surface of concrete paving to improve workability.

4. All curb and gutter shall be integral with the pavement.

5. Parabolic crowns are required on all street pavements except on major thoroughfares where straight sections are required.

6. Streets and alleys shall be constructed with provisions for sidewalk ramps at all intersections.

DRAINAGE

1. Storm sewer pipe shall be reinforced concrete, Class III unless otherwise noted.

2. All structural concrete shall be Class "C" (3600 psi compressive strength at 28 days), air entrained.
1.

3. The contractor shall install plugs in storm sewer lines or otherwise prevent mud from entering the storm sewer system during construction.

WATER AND SANITARY SEWER

1. Water mains shall be AWWA C-900 or 905 PVC Class 200 unless otherwise noted. Minimum cover for waterlines is 48" below top of curb, 60" where no curbed street is present or as required to clear existing utilities, whichever is greater. Class B+ embedment unless otherwise noted.

2. All utility trench backfill shall be performed in 12"loose lifts and mechanically compacted with approved vibratory methods.

3. Marking tape shall be installed one foot above and over PVC water lines.

4. Fittings for PVC water lines shall be ductile iron and be encased in a polyethylene sheath.

5. All Mechanical Joints will be restrained. (Mega-Lug etc.)

6. Valves, including tapping valves shall be resilient seat gate valves, unless noted otherwise.

7. All direct burial valves shall be provided with cast iron valve boxes with PVC stacks. Valve stacks shall be vertical and concentric with the valve stem. Stainless steel valve extensions are required on all valves where the operating nut is greater than 4 feet below finished grade.

8. Fire hydrants shall be Waterous or equal as directed or approved by the City of Celina on a case by case basis and field painted silver with bonnet and caps color-coded to pipe size.
a. Six inch line- silver body with RED bonnet and caps.
b. Eight inch line- silver body with BLUE bonnet and caps.
c. Ten inch line- silver body with GREEN bonnet and caps.
d. Twelve inch and larger- silver body with YELLOW bonnet and caps.

9. All exposed bolting on any buried equipment or material shall be stainless steel. Included are:
a. Bonnet and stuffing box bolts on valves.
b. Shoe bolts on fire hydrants.
c. Flange bolts.
d. "Cor-ten" mechanical joint "T" bolts are acceptable for direct burial service.

10. Depending on meter size; meter boxes shall be DFW37C-12-1SAF, DFW38C-14-1SAF, DFW65C-14-1SAF, or approved equal, and shall incorporate the Celina logo in the lid.
11. One sample station shall be provided to the city for every 250 connections.

Sanitary sewer mains shall be DR 35 PVC. Embedment shall be Class H unless otherwise noted.

a. The contractor shall install and maintain watertight plugs in all connections to the City's sanitary sewer system until the City accepts the project.
b. All sanitary sewer lines and manholes shall be leak tested before the project is accepted. Deflection testing of PVC sewer lines is required. Deflection shall be tested with a mandrel for 5% deflection.
c. All sewer lines shall be video inspected with a copy of the video and station report submitted to the Inspector.
d. Mandrel, Air Test, and Video inspection shall not be performed until all utilities are complete, in place, and backfilled.

Specifications are not meant to exclude any other manufacturer. Any specification may be replaced with an approved equal upon approval by the City of Celina.

AS-BUILT DRAWINGS
THIS DRAWING HAS BEEN REVISED TO CONFORM TO THE CONSTRUCTION RECORDS PROVIDED BY THE CONTRACTOR. ALIGNMENT AND GRADES SHOWN ON THIS DRAWING WERE NOT FIELD VERIFIED BY THE ENGINEER.

TIM C. SPIARS, P.E.

1/25/16
DATE

P-201402-01

piars ENGINEERING
765 Custer Road, Suite 100 • Plano, TX 75075 • (972) 422-0077 • TBPE No. F-2121

STATE OF TEXAS
TIM C. SPIARS
LICENSED PROFESSIONAL ENGINEER
1/25/16

PARKSIDE
CITY OF CELINA
COLLIN COUNTY, TEXAS
GENERAL NOTES

Issue Dates:

| Date | Revisions |
|---|---|

Scale: N/A
Drawn By: RAS
Checked By: JMH
Sheet 3 of 26
SEI No. 13-157

Drawing: G:\2013\2013\13-157 Park Place Celina\Phase 1\13-157-gn.dwg Saved By: Gaston Save Time: 7/22/2014 6:39:10 AM Plotted by: gaston Plot Date: 1/25/2016 10:32 AM

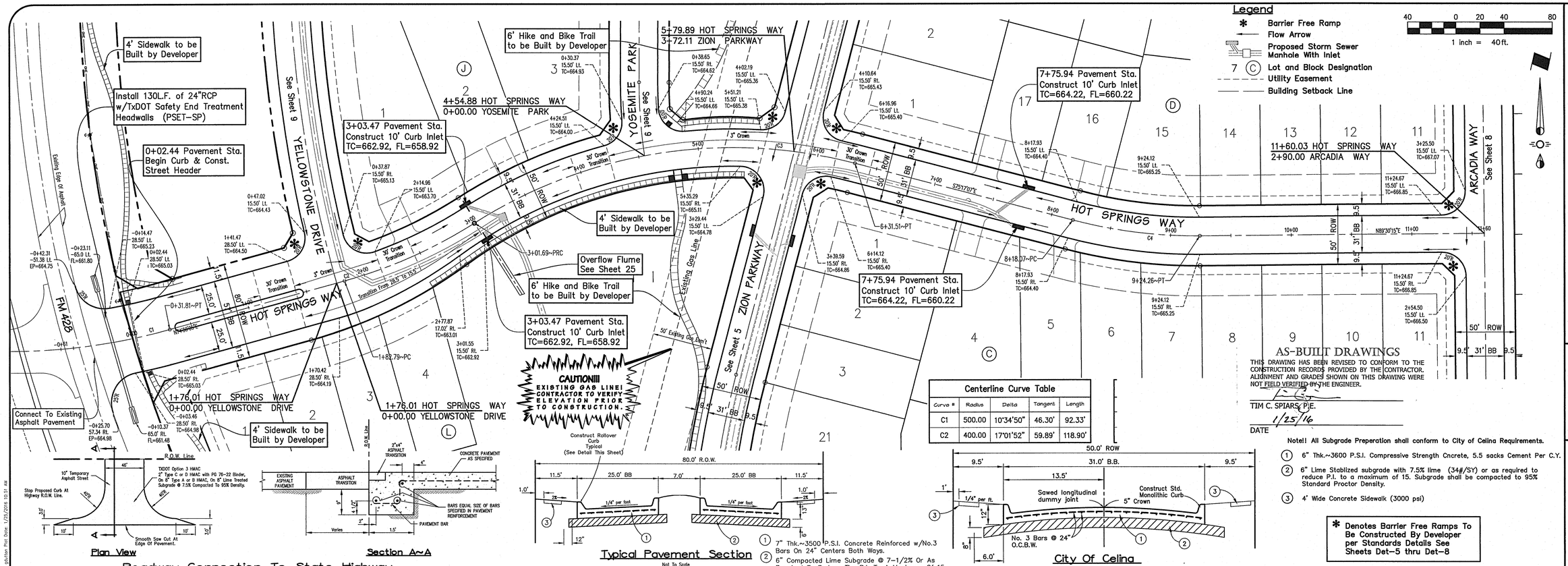


| Centerline Curve Table | | | | |
|---|---|---|---|---|
| Curve # | Radius | Delta | Tangent | Length |
| C1 | 500.00 | 10°34'50" | 46.30' | 92.33' |
| C2 | 400.00 | 17°01'52" | 59.89' | 118.90' |

1. 7" Thk.~3500 P.S.I. Concrete Reinforced w/No.3 Bars On 24" Centers Both Ways.
2. 6" Compacted Lime Subgrade @ 7-1/2% Or As Required To Reduce The P.I. To A Maximum Of 15.
3. 4' Sidewalk To Be Built By Developer.

Note!! All Subgrade Preperation shall conform to City of Celina Requirements.

1. 6" Thk.~3600 P.S.I. Compressive Strength Cncrete, 5.5 sacks Cement Per C.Y.
2. 6" Lime Stabilized subgrade with 7.5% lime (34#/SY) or as required to reduce P.I. to a maximum of 15. Subgrade shall be compacted to 95% Standard Proctor Density.
3. 4' Wide Concrete Sidewalk (3000 psi)

* Denotes Barrier Free Ramps To Be Constructed By Developer per Standards Details See Sheets Det-5 thru Det-8

Benchmark No. 1

Top of the south end of a headwall being 21 feet north of the southeast corner of the subject tract (said southeast corner being in the approximate center line of County Road 56). Elevation = 668.10

Benchmark No. 2

Being a pk nail found at the centerline intersection of Mellanie Ct and Tolleson Drive. Elevation = 668.00

CAUTION !!! EXISTING UTILITIES

EXISTING UTILITIES AND UNDERGROUND FACILITIES INDICATED ON THESE PLANS HAVE BEEN LOCATED FROM REFERENCE INFORMATION. IT SHALL BE THE RESPONSIBILITY OF THE CONTRACTOR TO VERIFY BOTH HORIZONTALLY AND VERTICALLY THE LOCATION OF ALL EXISTING UTILITIES AND UNDERGROUND FACILITIES PRIOR TO CONSTRUCTION. TO TAKE NECESSARY PRECAUTIONS IN ORDER TO PROTECT ALL FACILITIES ENCOUNTERED. THE CONTRACTOR SHALL PRESERVE AND PROTECT ALL EXISTING UTILITIES FROM DAMAGE DURING CONSTRUCTION.

CALL 1-800-344-8377 (DIG-TESS) OR OTHER UTILITY LOCATION SERVICES 48 HOURS PRIOR TO CONSTRUCTION ACTIVITY. SPIARS ENGINEERING, INC. IS NOT RESPONSIBLE FOR KNOWING ALL EXISTING UTILITIES OR DEPICTING EXACT LOCATIONS OF UTILITIES ON DRAWINGS.

P-201402-01


spiars ENGINEERING
765 Custer Road, Suite 100 • Plano, TX 75075 • (972) 422-0077 • TBPE No. F-2121


# PARKSIDE
CITY OF CELINA
COLLIN COUNTY, TEXAS
PAVING PLAN & PROFILE

Issue Dates:

| Revisions | Date |
|---|---|
| Revised H&B Trail & Sidewalks | 10/14/14 |
| Revised H&B Trail & Sidewalks | 11/04/14 |

Scale: 1"=40'H, 1"=5'V
Drawn By: RAS
Checked By: JMH
Sheet 4 of 26
SEI No. 13-157

Benchmark No. 1

Top of the south end of a headwall being 21 feet north of the southeast corner of the subject tract (said southeast corner being in the approximate center line of County Road 56). Elevation = 668.10

Benchmark No. 2

Being a pk nail found at the centerline intersection of Mellanie Ct and Tolleson Drive. Elevation = 668.00

40 0 20 40 80

1 inch = 40ft.

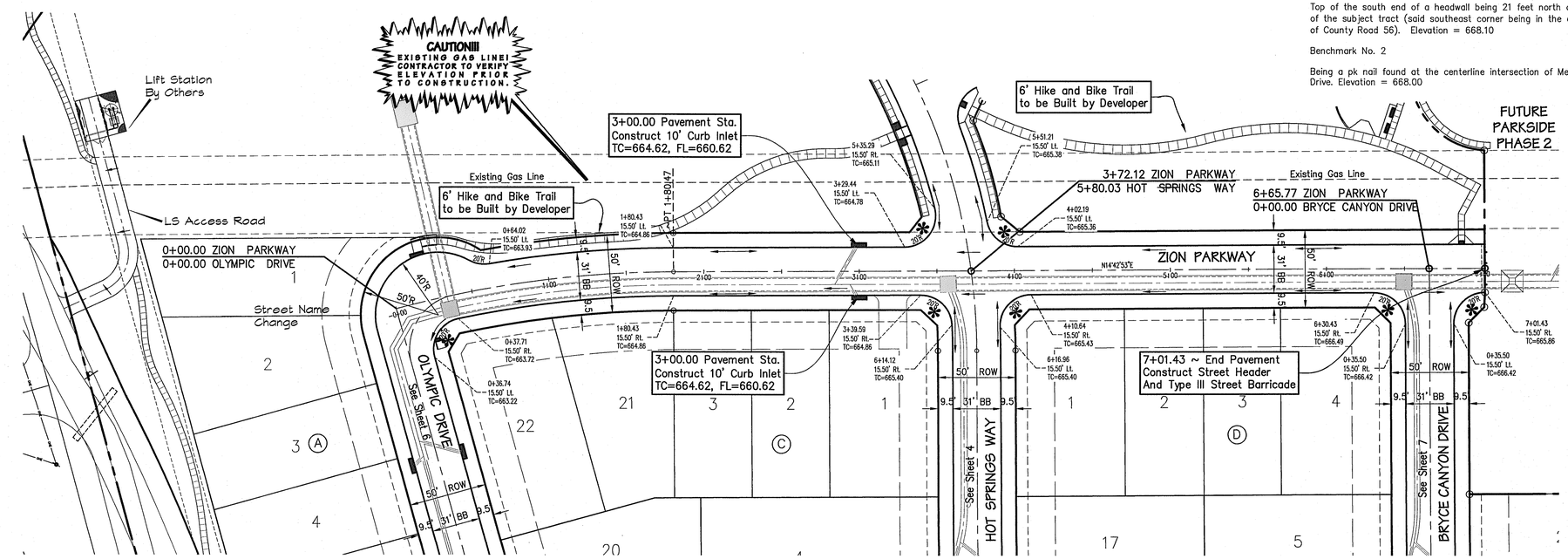


**Legend**

- * Barrier Free Ramp
- Flow Arrow
- Proposed Storm Sewer Manhole With Inlet
- 7 (C) Lot and Block Designation
- Utility Easement
- Building Setback Line

* Denotes Barrier Free Ramps To Be Constructed By Developer per Standards Details See Sheets Det-5 thru Det-8

Note
See Sheet 4 For Typical Paving Sections.

AS-BUILT DRAWINGS

THIS DRAWING HAS BEEN REVISED TO CONFORM TO THE CONSTRUCTION RECORDS PROVIDED BY THE CONTRACTOR. ALIGNMENT AND GRADES SHOWN ON THIS DRAWING WERE NOT FIELD VERIFIED BY THE ENGINEER.

TIM C. SPIARS, P.E.

1/25/16

DATE

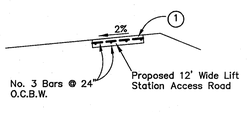


(1) 6" Thk.~3600 P.S.I. Compressive Strength Concrete, 5.5 sacks Cement Per C.Y.

## LS Access Road Detail

## CAUTION !!!
### EXISTING UTILITIES

EXISTING UTILITIES AND UNDERGROUND FACILITIES INDICATED ON THESE PLANS HAVE BEEN LOCATED FROM REFERENCE INFORMATION. IT SHALL BE THE RESPONSIBILITY OF THE CONTRACTOR TO VERIFY BOTH HORIZONTALLY AND VERTICALLY THE LOCATION OF ALL EXISTING UTILITIES AND UNDERGROUND FACILITIES PRIOR TO CONSTRUCTION, TO TAKE NECESSARY PRECAUTIONS IN ORDER TO PROTECT ALL FACILITIES ENCOUNTERED. THE CONTRACTOR SHALL PRESERVE AND PROTECT ALL EXISTING UTILITIES FROM DAMAGE DURING CONSTRUCTION.

CALL 1-800-344-8377 (DIG-TESS) OR OTHER UTILITY LOCATION SERVICES 48 HOURS PRIOR TO CONSTRUCTION ACTIVITY. SPIARS ENGINEERING, INC. IS NOT RESPONSIBLE FOR KNOWING ALL EXISTING UTILITIES OR DEPICTING EXACT LOCATIONS OF UTILITIES ON DRAWINGS.

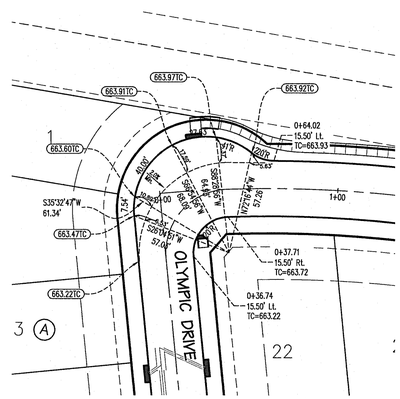


## PAVING CURVE DETAIL

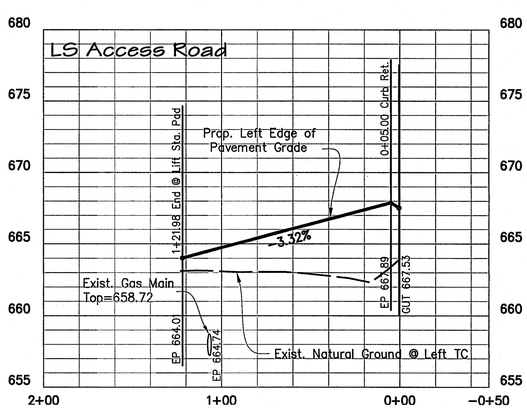


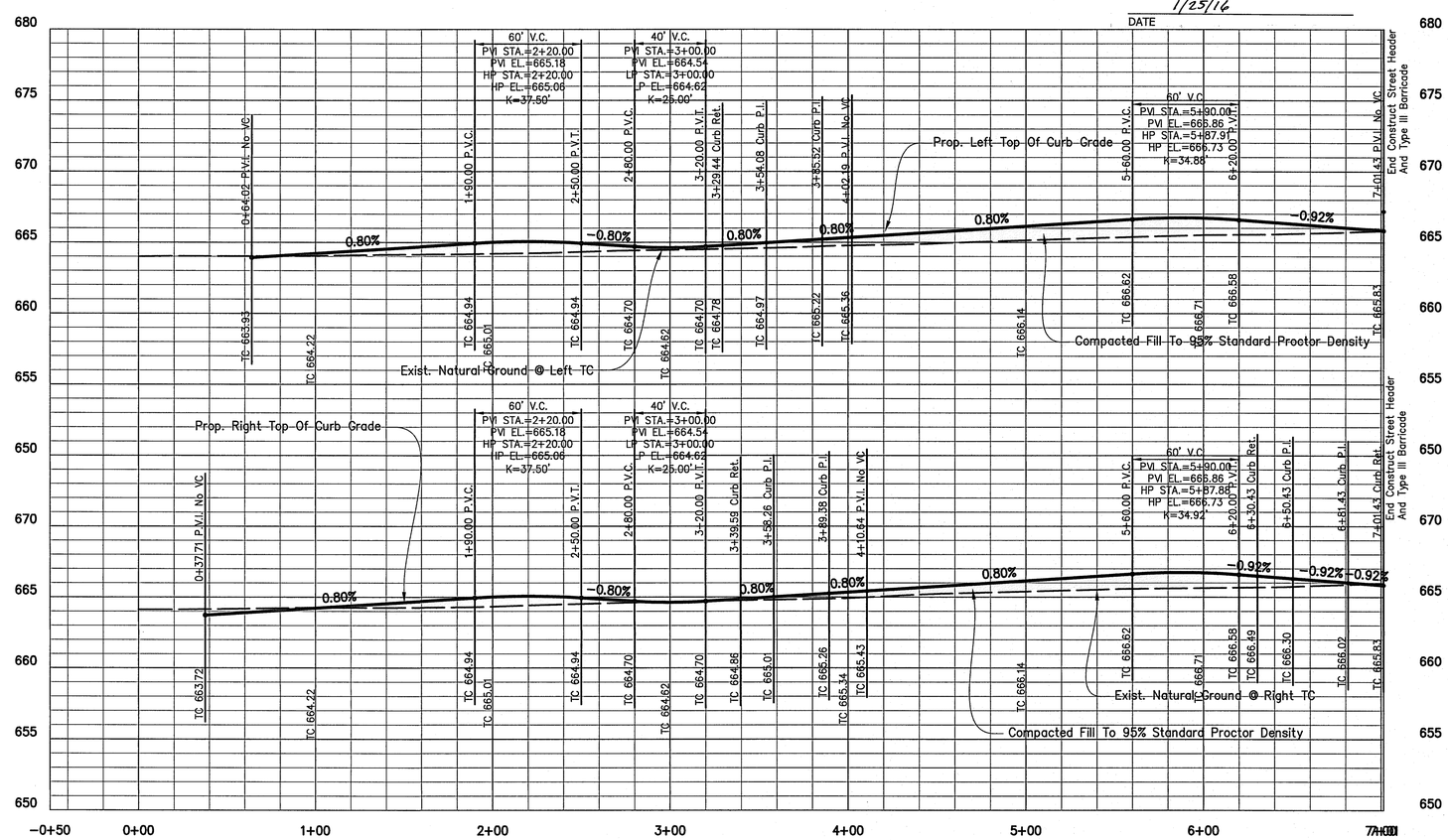


P-201402-01


spiars ENGINEERING
765 Custer Road, Suite 100 • Plano, TX 75075 • (972) 422-0077 • TBPE No. F-2121


STATE OF TEXAS
TIMOTHY C. SPIARS
100431
PROFESSIONAL ENGINEER
1/25/16

# PARKSIDE
CITY OF CELINA
COLLIN COUNTY, TEXAS
PAVING PLAN & PROFILE

Issue Dates:

| Revisions | Date |
|---|---|
| Revised H&B Trail & Sidewalks | 10/14/14 |
| Revised H&B Trail & Sidewalks | 11/04/14 |

ZION PARKWAY & LS Access Road

Scale: 1"=40'H, 1=5'V

Drawn By: RAS

Checked By: JMH

Sheet 5 of 26

SEI No. 13-157

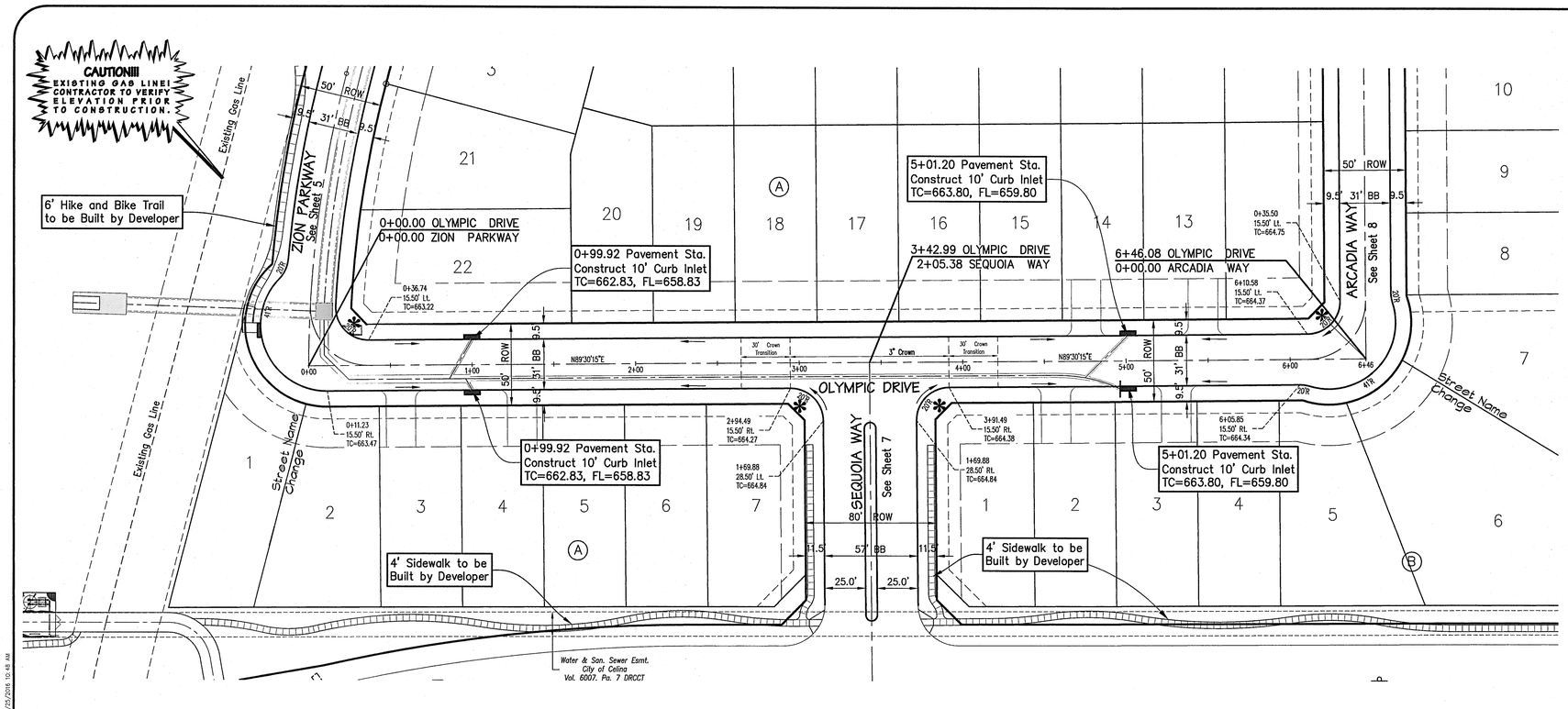


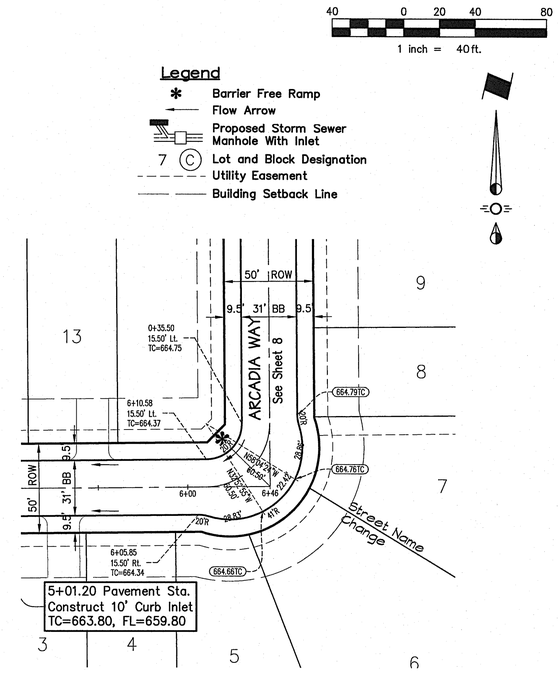


PAVING CURVE DETAIL

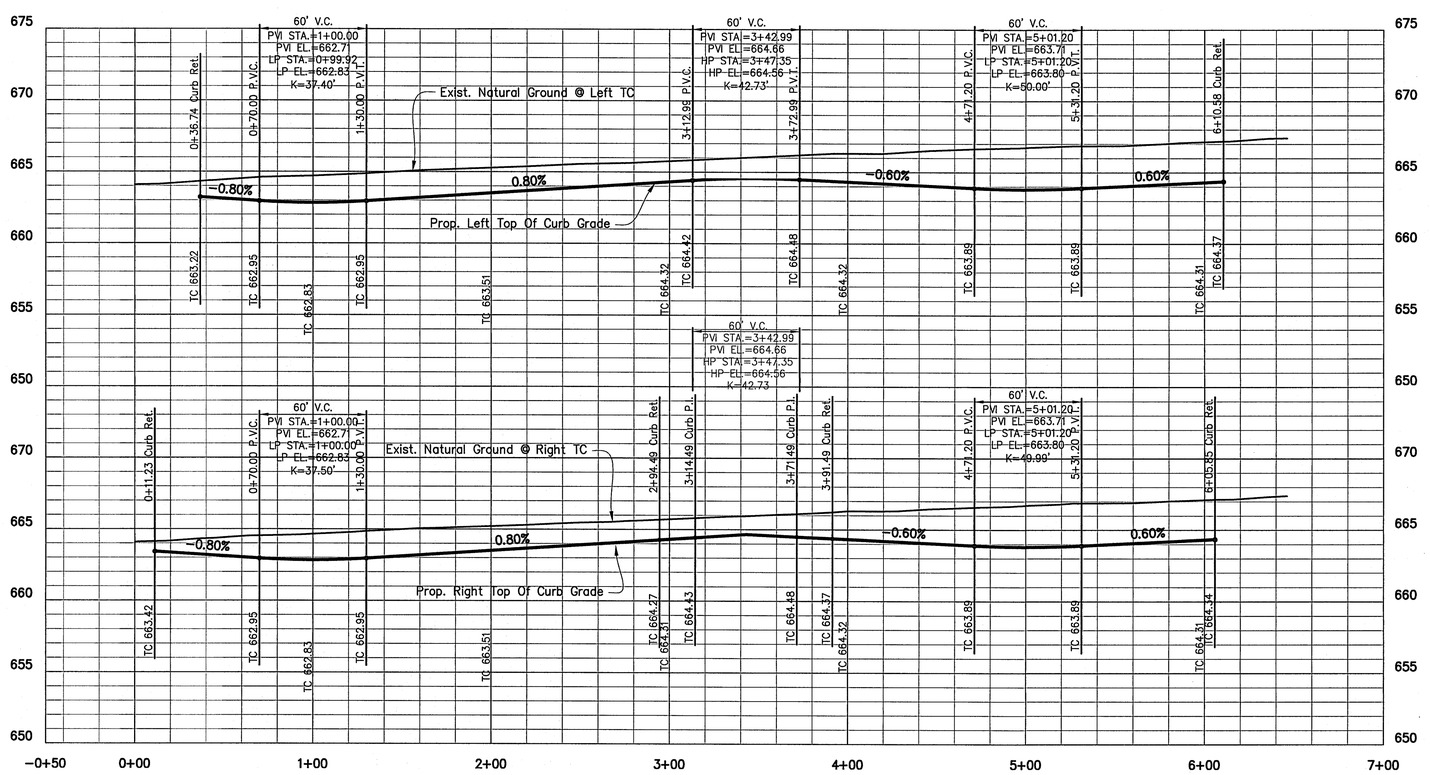


AS-BUILT DRAWINGS
THIS DRAWING HAS BEEN REVISED TO CONFORM TO THE CONSTRUCTION RECORDS PROVIDED BY THE CONTRACTOR. ALIGNMENT AND GRADES SHOWN ON THIS DRAWING WERE NOT FIELD VERIFIED BY THE ENGINEER.

TIM C. SPIARS, P.E.

1/25/16
DATE

* Denotes Barrier Free Ramps To Be Constructed By Developer per Standards Details See Sheets Det-5 thru Det-8

Note
See Sheet 4 For Typical Paving Sections.

## CAUTION !!!
### EXISTING UTILITIES

EXISTING UTILITIES AND UNDERGROUND FACILITIES INDICATED ON THESE PLANS HAVE BEEN LOCATED FROM REFERENCE INFORMATION. IT SHALL BE THE RESPONSIBILITY OF THE CONTRACTOR TO VERIFY BOTH HORIZONTALLY AND VERTICALLY THE LOCATION OF ALL EXISTING UTILITIES AND UNDERGROUND FACILITIES PRIOR TO CONSTRUCTION, TO TAKE NECESSARY PRECAUTIONS IN ORDER TO PROTECT ALL FACILITIES ENCOUNTERED. THE CONTRACTOR SHALL PRESERVE AND PROTECT ALL EXISTING UTILITIES FROM DAMAGE DURING CONSTRUCTION.

CALL 1-800-344-8377 (DIG-TESS) OR OTHER UTILITY LOCATION SERVICES 48 HOURS PRIOR TO CONSTRUCTION ACTIVITY. SPIARS ENGINEERING, INC. IS NOT RESPONSIBLE FOR KNOWING ALL EXISTING UTILITIES OR DEPICTING EXACT LOCATIONS OF UTILITIES ON DRAWINGS.

Benchmark No. 1

Top of the south end of a headwall being 21 feet north of the southeast corner of the subject tract (said southeast corner being in the approximate center line of County Road 56). Elevation = 668.10

Benchmark No. 2

Being a pk nail found at the centerline intersection of Mellanie Ct and Tolleson Drive. Elevation = 668.00

P-201402-01


spiars ENGINEERING
765 Custer Road, Suite 100 • Plano, TX 75075 • (972) 422-0077 • TBPE No. F-2121


STATE OF TEXAS
TIMOTHY C. SPIARS
PROFESSIONAL ENGINEER
1/25/16

# PARKSIDE
CITY OF CELINA
COLLIN COUNTY, TEXAS
PAVING PLAN & PROFILE

Issue Dates:

| Revisions | Date |
|---|---|
| Revised H&B Trail & Sidewalks | 10/14/14 |
| Revised H&B Trail & Sidewalks | 11/04/14 |

OLYMPIC DRIVE

Scale: 1"=40'H, 1=5'V
Drawn By: RAS
Checked By: JMH
Sheet 6 of 26
SEI No. 13-157

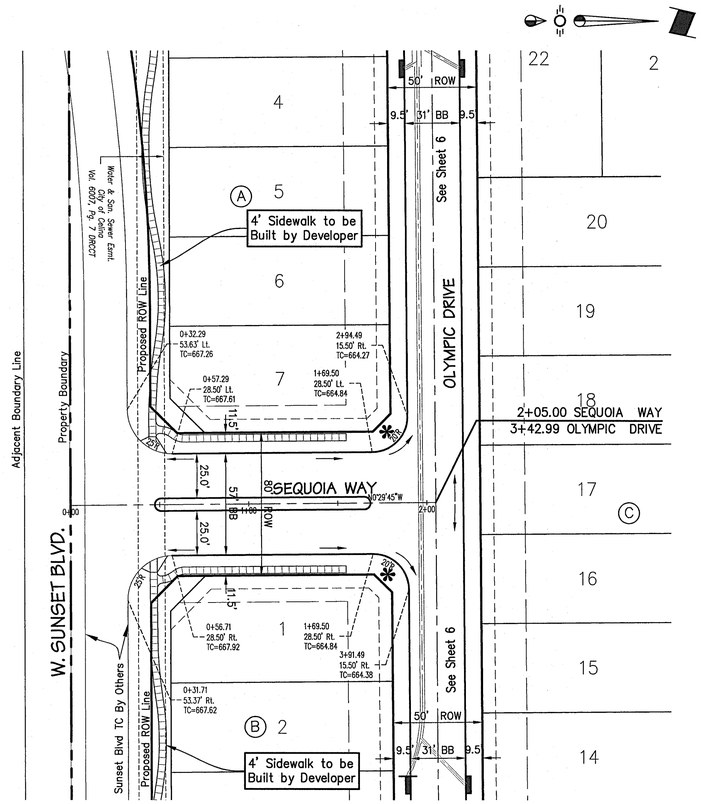


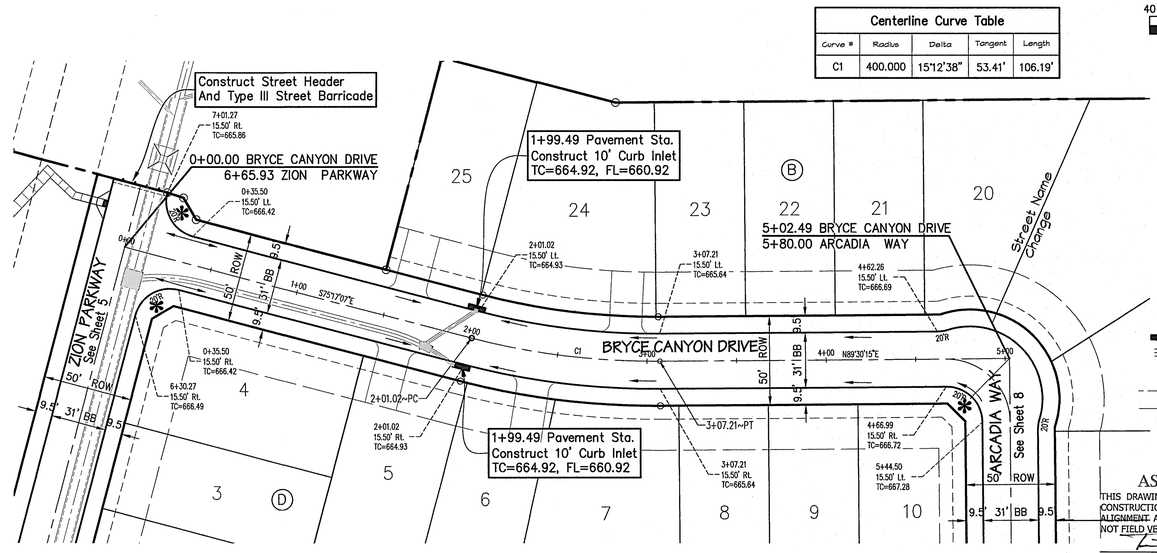


| Centerline Curve Table | | | | |
|---|---|---|---|---|
| Curve # | Radius | Delta | Tangent | Length |
| C1 | 400.000 | 15°12'38" | 53.41' | 106.19' |

40 0 20 40 80
1 inch = 40 ft.

**Legend**

- * Barrier Free Ramp
- Flow Arrow
- Proposed Storm Sewer Manhole With Inlet
- 7 (C) Lot and Block Designation
- Utility Easement
- Building Setback Line

AS-BUILT DRAWINGS
THIS DRAWING HAS BEEN REVISED TO CONFORM TO THE CONSTRUCTION RECORDS PROVIDED BY THE CONTRACTOR. ALIGNMENT AND GRADES SHOWN ON THIS DRAWING WERE NOT FIELD VERIFIED BY THE ENGINEER.

TIM C. SPIARS, P.E.

1/25/16
DATE

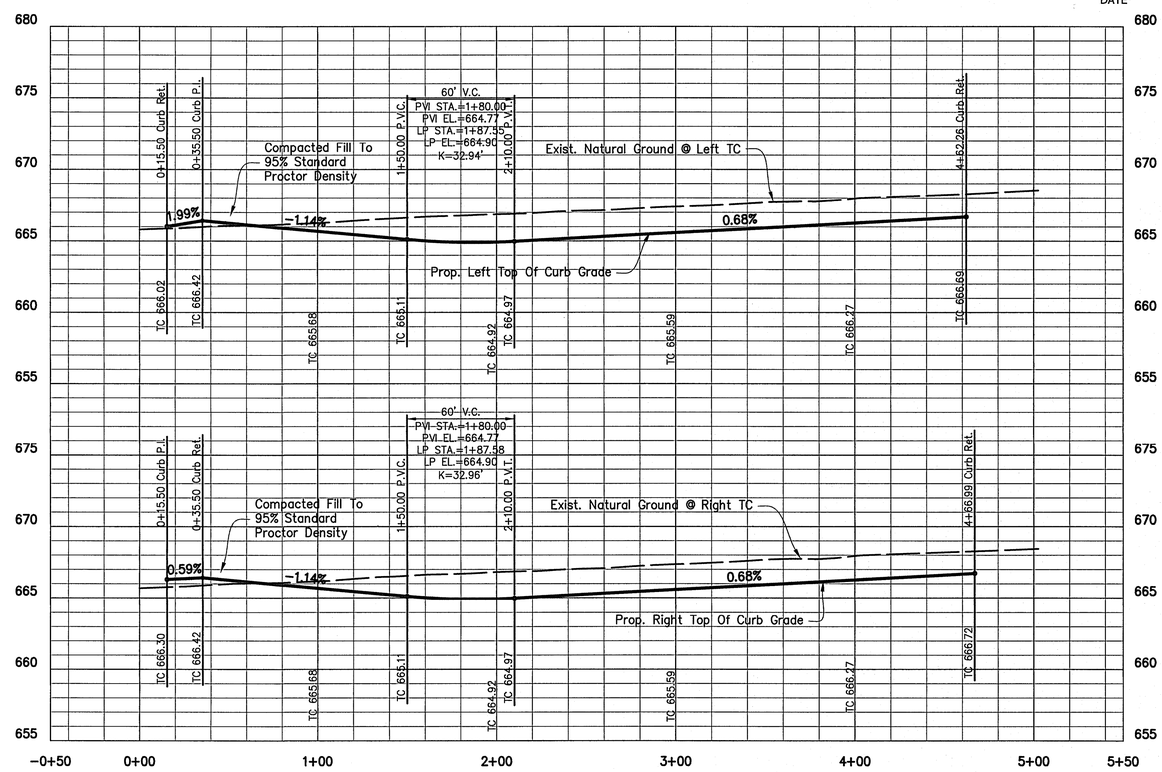


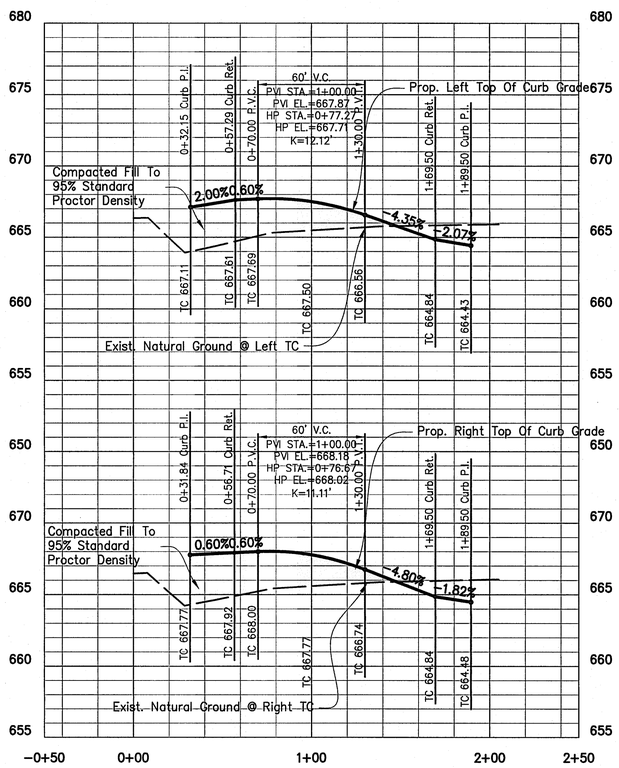


* Denotes Barrier Free Ramps To Be Constructed By Developer per Standards Details See Sheets Det-5 thru Det-8

Note
See Sheet 4 For Typical Paving Sections.

## CAUTION !!!
### EXISTING UTILITIES

EXISTING UTILITIES AND UNDERGROUND FACILITIES INDICATED ON THESE PLANS HAVE BEEN LOCATED FROM REFERENCE INFORMATION. IT SHALL BE THE RESPONSIBILITY OF THE CONTRACTOR TO VERIFY BOTH HORIZONTALLY AND VERTICALLY THE LOCATION OF ALL EXISTING UTILITIES AND UNDERGROUND FACILITIES PRIOR TO CONSTRUCTION, TO TAKE NECESSARY PRECAUTIONS IN ORDER TO PROTECT ALL FACILITIES ENCOUNTERED. THE CONTRACTOR SHALL PRESERVE AND PROTECT ALL EXISTING UTILITIES FROM DAMAGE DURING CONSTRUCTION.

CALL 1-800-344-8377 (DIG-TESS) OR OTHER UTILITY LOCATION SERVICES 48 HOURS PRIOR TO CONSTRUCTION ACTIVITY. SPIARS ENGINEERING, INC. IS NOT RESPONSIBLE FOR KNOWING ALL EXISTING UTILITIES OR DEPICTING EXACT LOCATIONS OF UTILITIES ON DRAWINGS.

Benchmark No. 1

Top of the south end of a headwall being 21 feet north of the southeast corner of the subject tract (said southeast corner being in the approximate center line of County Road 56). Elevation = 668.10

Benchmark No. 2

Being a pk nail found at the centerline intersection of Mellanie Ct and Tolleson Drive. Elevation = 668.00

P-201402-01


spiars ENGINEERING
765 Custer Road, Suite 100 • Plano, TX 75075 • (972) 422-0077 • TBPE No. F-2121


STATE OF TEXAS
TIMOTHY C. SPIARS
84012
LICENSED PROFESSIONAL ENGINEER
1/25/16

# PARKSIDE
CITY OF CELINA
COLLIN COUNTY, TEXAS
PAVING PLAN & PROFILE

SEQUOIA WAY & BRYCE CANYON DRIVE

Issue Dates:

| Revisions | Date |
|---|---|
| Sequoia Way tie into W.Sunset Blvd. | 10/02/14 |
| Revised Sidewalks | 10/14/14 |
| Revised Sidewalks | 11/04/14 |

Scale: 1"=40'H, 1=5'V
Drawn By: RAS
Checked By: JMH
Sheet 7 of 26
SEI No. 13-157

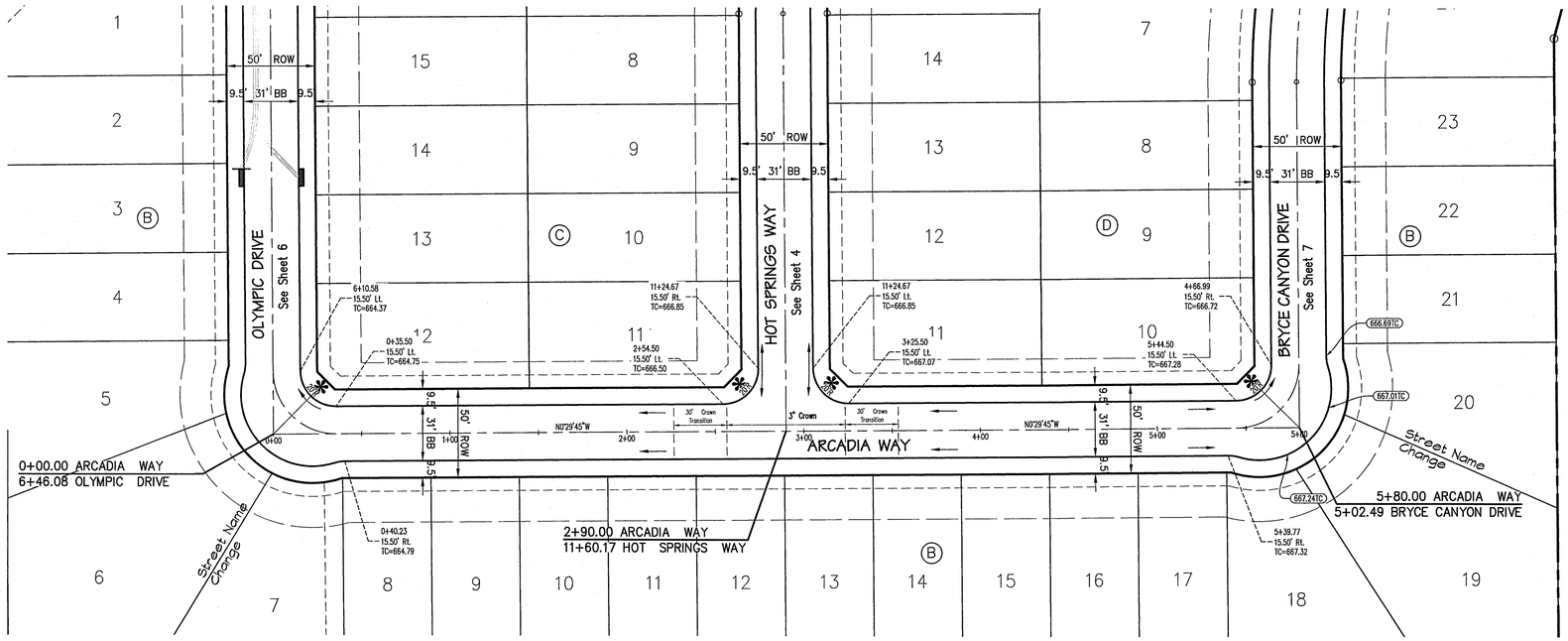


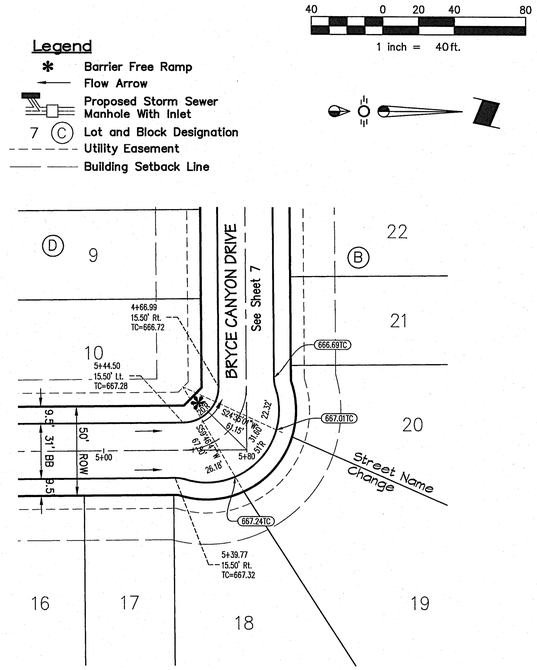


PAVING CURVE DETAIL

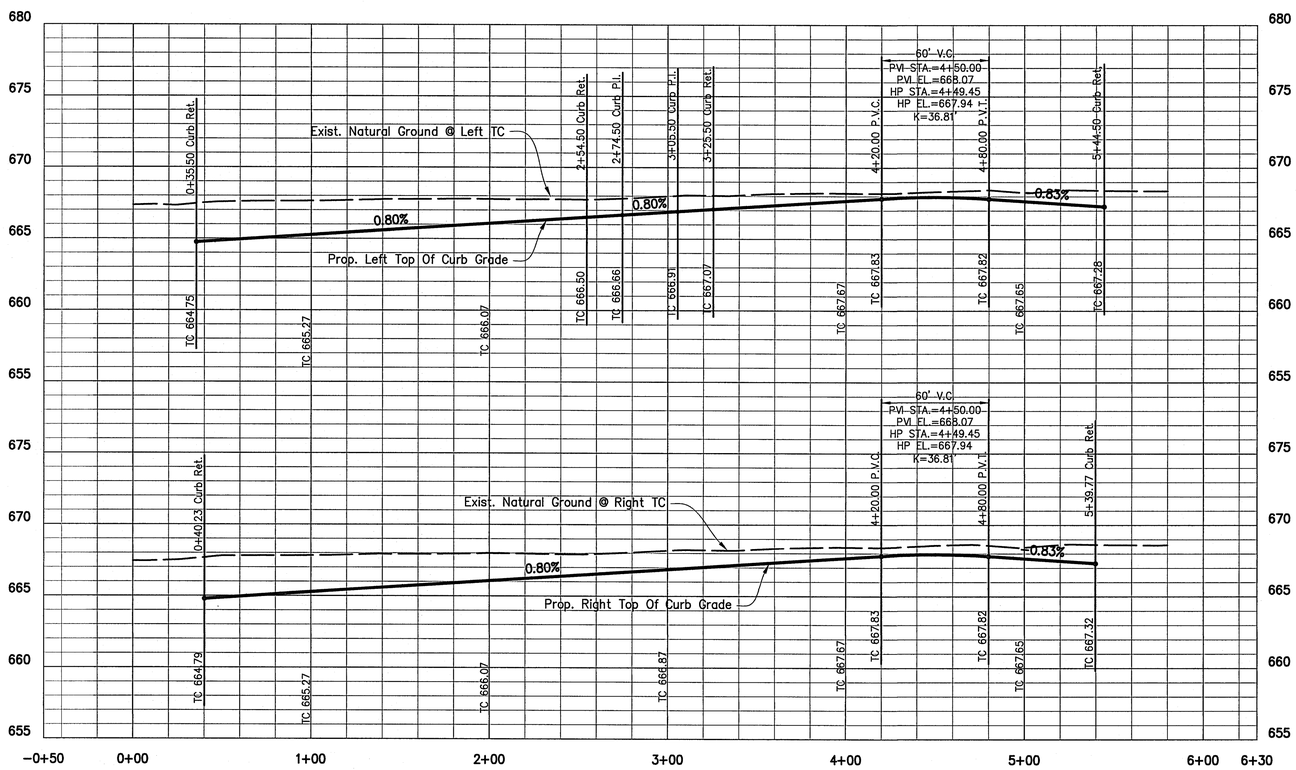


*** Denotes Barrier Free Ramps To Be Constructed By Developer per Standards Details See Sheets Det-5 thru Det-8**

Note
See Sheet 4 For Typical Paving Sections.

AS-BUILT DRAWINGS
THIS DRAWING HAS BEEN REVISED TO CONFORM TO THE CONSTRUCTION RECORDS PROVIDED BY THE CONTRACTOR. ALIGNMENT AND GRADES SHOWN ON THIS DRAWING WERE NOT FIELD VERIFIED BY THE ENGINEER.

TIM C. SPIARS, P.E.
1/25/16
DATE

Benchmark No. 1

Top of the south end of a headwall being 21 feet north of the southeast corner of the subject tract (said southeast corner being in the approximate center line of County Road 56). Elevation = 668.10

Benchmark No. 2

Being a pk nail found at the centerline intersection of Mellanie Ct and Tolleson Drive. Elevation = 668.00

## CAUTION !!!
### EXISTING UTILITIES

EXISTING UTILITIES AND UNDERGROUND FACILITIES INDICATED ON THESE PLANS HAVE BEEN LOCATED FROM REFERENCE INFORMATION. IT SHALL BE THE RESPONSIBILITY OF THE CONTRACTOR TO VERIFY BOTH HORIZONTALLY AND VERTICALLY THE LOCATION OF ALL EXISTING UTILITIES AND UNDERGROUND FACILITIES PRIOR TO CONSTRUCTION, TO TAKE NECESSARY PRECAUTIONS IN ORDER TO PROTECT ALL FACILITIES ENCOUNTERED. THE CONTRACTOR SHALL PRESERVE AND PROTECT ALL EXISTING UTILITIES FROM DAMAGE DURING CONSTRUCTION.

CALL 1-800-344-8377 (DIG-TESS) OR OTHER UTILITY LOCATION SERVICES 48 HOURS PRIOR TO CONSTRUCTION ACTIVITY. SPIARS ENGINEERING, INC. IS NOT RESPONSIBLE FOR KNOWING ALL EXISTING UTILITIES OR DEPICTING EXACT LOCATIONS OF UTILITIES ON DRAWINGS.

P-201402-01


spiars ENGINEERING
765 Custer Road, Suite 100 • Plano, TX 75075 • (972) 422-0077 • TBPE No. F-2121


# PARKSIDE
CITY OF CELINA
COLLIN COUNTY, TEXAS

## PAVING PLAN & PROFILE

ARCADIA WAY

Issue Dates:

| Revisions | Date |
|---|---|
| | |

Scale: 1"=40'H, 1=5'V
Drawn By: RAS
Checked By: JMH
Sheet 8 of 26
SEI No. 13-157


Drawing: G:\2013_JOBS\13-157 Pres Ridge Celina\Phase 1\13-157 psv 5.dwg Saved By: gbatton Saved Time: 7/22/2014 6:48:05 AM
Plotted by: gbatton Plot Date: 1/25/2016 10:45 AM

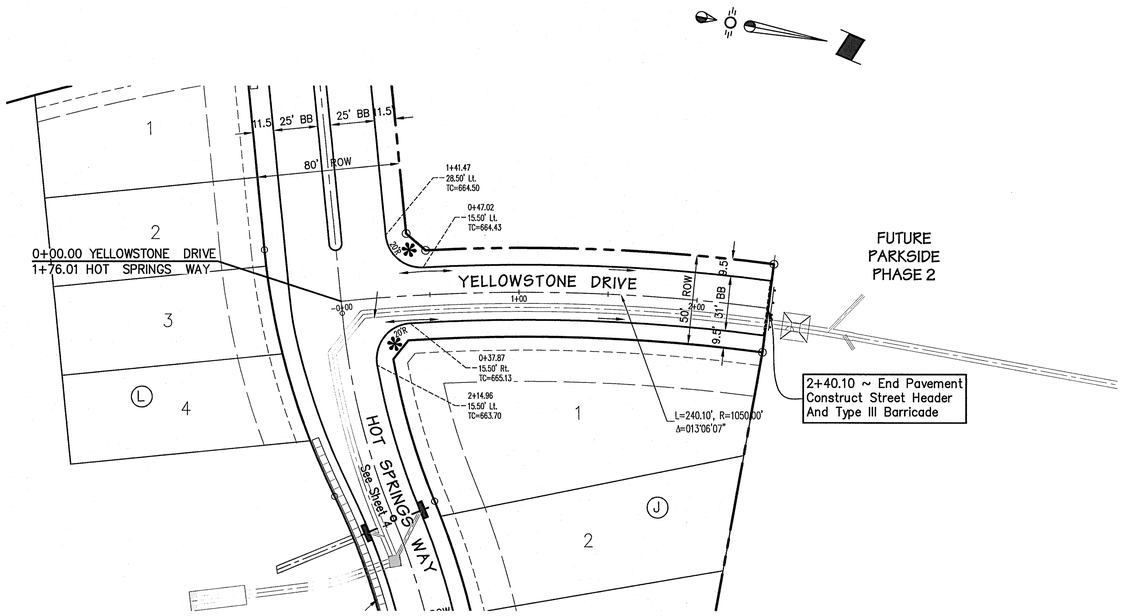


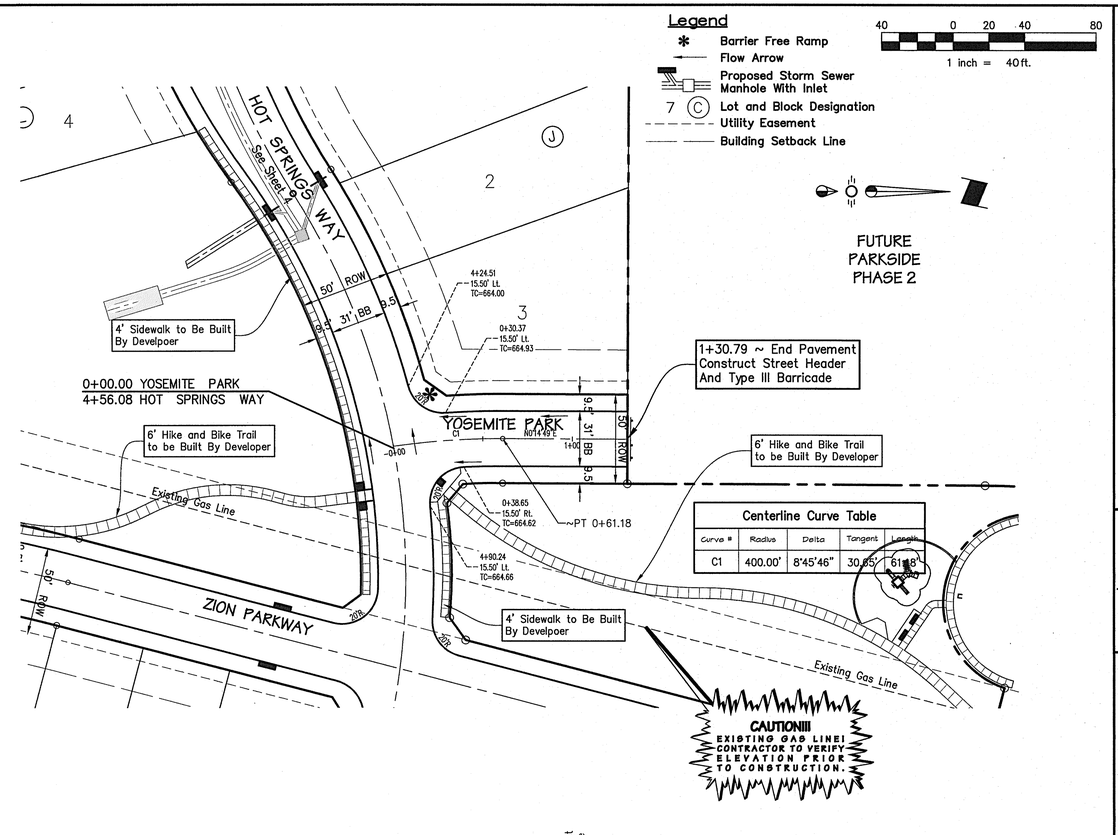


| Centerline Curve Table | | | | |
|---|---|---|---|---|
| Curve # | Radius | Delta | Tangent | Length |
| C1 | 400.00' | 8°45'46" | 30.65' | 61.18' |

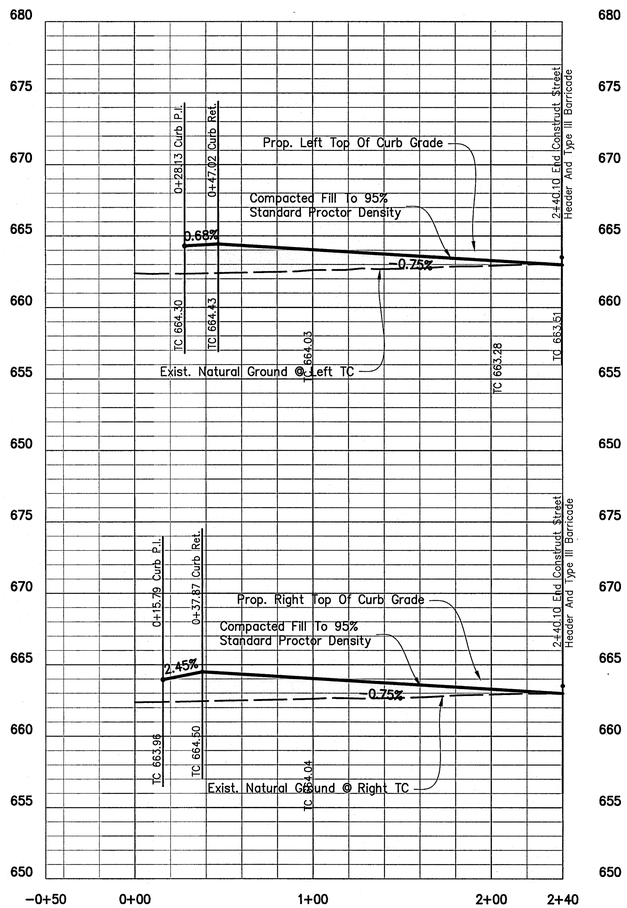


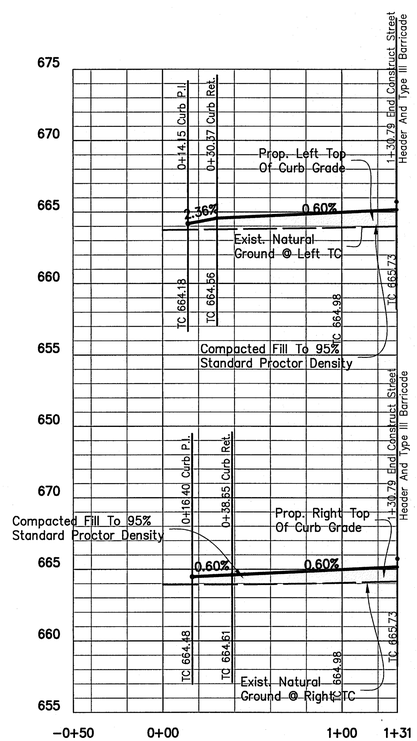


* Denotes Barrier Free Ramps To Be Constructed By Developer per Standards Details See Sheets Det-5 thru Det-8

Note
See Sheet 4 For Typical
Paving Sections.

AS-BUILT DRAWINGS
THIS DRAWING HAS BEEN REVISED TO CONFORM TO THE CONSTRUCTION RECORDS PROVIDED BY THE CONTRACTOR. ALIGNMENT AND GRADES SHOWN ON THIS DRAWING WERE NOT FIELD VERIFIED BY THE ENGINEER.

TIM C. SPIARS, P.E.

1/25/16
DATE

## CAUTION !!!
### EXISTING UTILITIES

EXISTING UTILITIES AND UNDERGROUND FACILITIES INDICATED ON THESE PLANS HAVE BEEN LOCATED FROM REFERENCE INFORMATION. IT SHALL BE THE RESPONSIBILITY OF THE CONTRACTOR TO VERIFY BOTH HORIZONTALLY AND VERTICALLY THE LOCATION OF ALL EXISTING UTILITIES AND UNDERGROUND FACILITIES PRIOR TO CONSTRUCTION, TO TAKE NECESSARY PRECAUTIONS IN ORDER TO PROTECT ALL FACILITIES ENCOUNTERED. THE CONTRACTOR SHALL PRESERVE AND PROTECT ALL EXISTING UTILITIES FROM DAMAGE DURING CONSTRUCTION.

CALL 1-800-344-8377 (DIG-TESS) OR OTHER UTILITY LOCATION SERVICES 48 HOURS PRIOR TO CONSTRUCTION ACTIVITY. SPIARS ENGINEERING, INC. IS NOT RESPONSIBLE FOR KNOWING ALL EXISTING UTILITIES OR DEPICTING EXACT LOCATIONS OF UTILITIES ON DRAWINGS.

Benchmark No. 1

Top of the south end of a headwall being 21 feet north of the southeast corner of the subject tract (said southeast corner being in the approximate center line of County Road 56). Elevation = 668.10

Benchmark No. 2

Being a pk nail found at the centerline intersection of Mellanie Ct and Tolleson Drive. Elevation = 668.00

P-201402-01


spiars ENGINEERING
765 Custer Road, Suite 100 • Plano, TX 75075 • (972) 422-0077 • TBPE No. F-2121


PARKSIDE
CITY OF CELINA
COLLIN COUNTY, TEXAS
PAVING PLAN & PROFILE

YELLOWSTONE DRIVE & YOSEMITE PARK

Issue Dates:

| Revisions | Date |
|---|---|
| Revised H&B Trail & Sidewalks | 10/14/14 |
| Revised H&B Trail & Sidewalks | 11/04/14 |

Scale: 1"=40'H, 1=5'V
Drawn By: RAS
Checked By: JMH
Sheet 9 of 26
SEI No. 13-157

Drawing: G:\2013 JOBS\13-157 Park Place Celina\Phase 1\13-157 psp & dwg Saved By: djulian Save Time: 1/25/2016 10:44:23 AM Plotted by: djulian Plot Date: 1/25/2016 3:09 PM

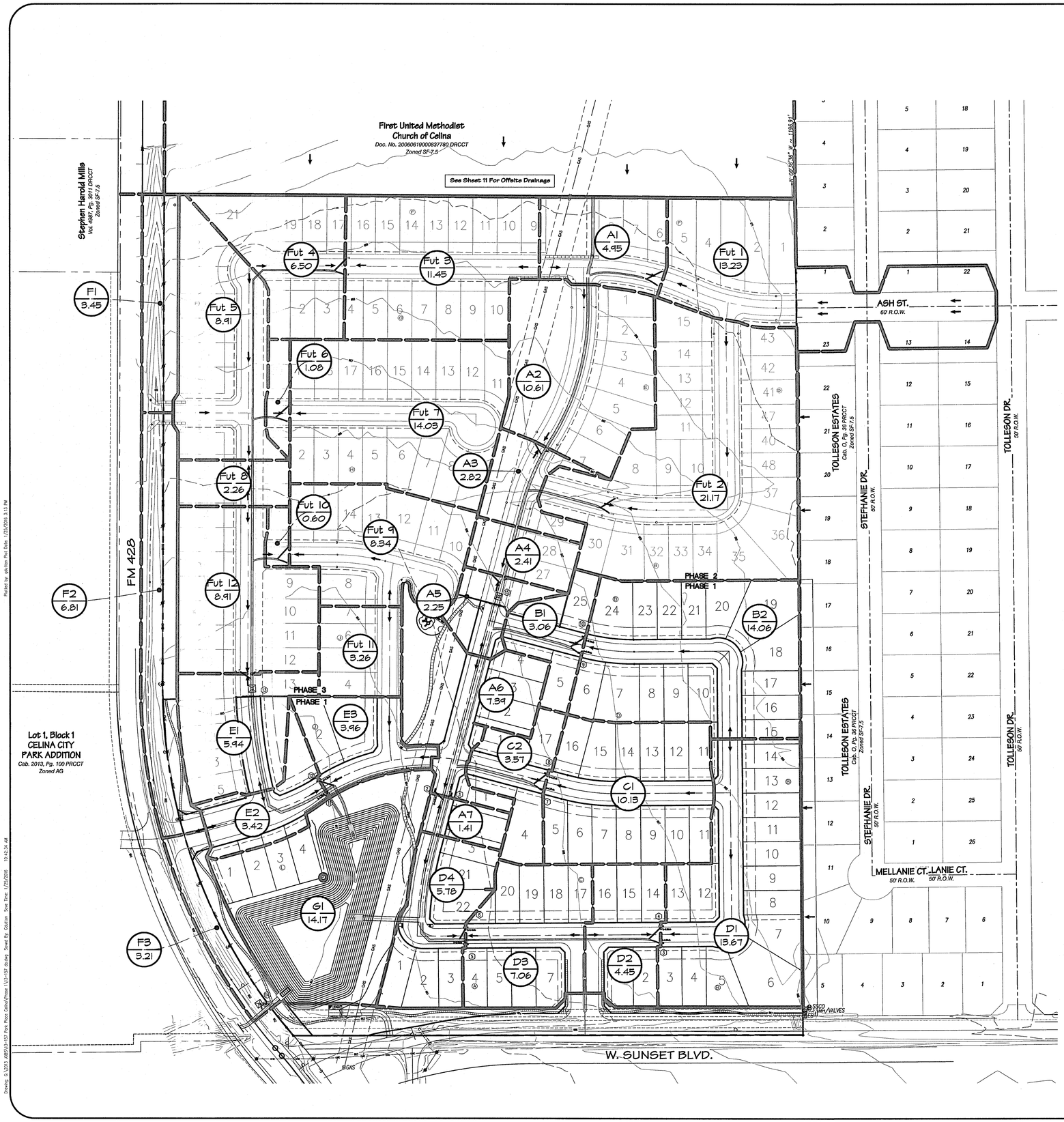


100 0 50 100 200
1 inch = 100 ft.

## Legend

- (A / 10.69) = Basin Name
- = $Q_{100}$
- = Drainage Area Divide
- 600 = Existing Contours
- = Direction Of Flow

## Subdivision

C = 0.60 $I_{100}$ = 7.52 Tc = 15 min.

### Onsite Drainage Data

| Basin | Acres | Tc | "I" | "C" | "CFS" |
|---|---|---|---|---|---|
| A1 | 1.10 | 15.00 | 7.52 | 0.60 | 4.95 |
| A2 | 2.35 | 15.00 | 7.52 | 0.60 | 10.61 |
| A3 | 0.62 | 15.00 | 7.52 | 0.60 | 2.82 |
| A4 | 0.53 | 15.00 | 7.52 | 0.60 | 2.41 |
| A5 | 0.50 | 15.00 | 7.52 | 0.60 | 2.25 |
| A6 | 1.64 | 15.00 | 7.52 | 0.60 | 7.39 |
| A7 | 0.31 | 15.00 | 7.52 | 0.60 | 1.41 |
| B1 | 0.68 | 15.00 | 7.52 | 0.60 | 3.06 |
| B2 | 3.12 | 15.00 | 7.52 | 0.60 | 14.06 |
| C1 | 2.24 | 15.00 | 7.52 | 0.60 | 10.13 |
| C2 | 0.79 | 15.00 | 7.52 | 0.60 | 3.57 |
| D1 | 3.03 | 15.00 | 7.52 | 0.60 | 13.67 |
| D2 | 0.99 | 15.00 | 7.52 | 0.60 | 4.45 |
| D3 | 1.56 | 15.00 | 7.52 | 0.60 | 7.06 |
| D4 | 1.28 | 15.00 | 7.52 | 0.60 | 5.78 |
| E1 | 1.32 | 15.00 | 7.52 | 0.60 | 5.94 |
| E2 | 0.76 | 15.00 | 7.52 | 0.60 | 3.42 |
| E3 | 0.88 | 15.00 | 7.52 | 0.60 | 3.96 |
| F1 | 0.76 | 15.00 | 7.52 | 0.60 | 3.45 |
| F2 | 1.51 | 15.00 | 7.52 | 0.60 | 6.81 |
| F3 | 0.71 | 15.00 | 7.52 | 0.60 | 3.21 |
| G1 | 3.14 | 15.00 | 7.52 | 0.60 | 14.17 |

### Future Site Drainage Data

| Basin | Acres | Tc | "I" | "C" | "CFS" |
|---|---|---|---|---|---|
| Fut 1 | 2.93 | 15.00 | 7.52 | 0.60 | 13.23 |
| Fut 2 | 4.69 | 15.00 | 7.52 | 0.60 | 21.17 |
| Fut 3 | 2.54 | 15.00 | 7.52 | 0.60 | 11.45 |
| Fut 4 | 1.44 | 15.00 | 7.52 | 0.60 | 6.50 |
| Fut 5 | 1.97 | 15.00 | 7.52 | 0.60 | 8.91 |
| Fut 6 | 0.24 | 15.00 | 7.52 | 0.60 | 1.08 |
| Fut 7 | 3.11 | 15.00 | 7.52 | 0.60 | 14.03 |
| Fut 8 | 0.50 | 15.00 | 7.52 | 0.60 | 2.26 |
| Fut 9 | 1.85 | 15.00 | 7.52 | 0.60 | 8.34 |
| Fut 10 | 0.13 | 15.00 | 7.52 | 0.60 | 0.60 |
| Fut 11 | 0.72 | 15.00 | 7.52 | 0.60 | 3.26 |
| Fut 12 | 1.97 | 15.00 | 7.52 | 0.60 | 8.91 |

## AS-BUILT DRAWINGS

THIS DRAWING HAS BEEN REVISED TO CONFORM TO THE CONSTRUCTION RECORDS PROVIDED BY THE CONTRACTOR. ALIGNMENT AND GRADES SHOWN ON THIS DRAWING WERE NOT FIELD VERIFIED BY THE ENGINEER.

TIM C. SPIARS, P.E.

DATE 1/25/16

## CAUTION !!!

### EXISTING UTILITIES

EXISTING UTILITIES AND UNDERGROUND FACILITIES INDICATED ON THESE PLANS HAVE BEEN LOCATED FROM REFERENCE INFORMATION. IT SHALL BE THE RESPONSIBILITY OF THE CONTRACTOR TO VERIFY BOTH HORIZONTALLY AND VERTICALLY THE LOCATION OF ALL EXISTING UTILITIES AND UNDERGROUND FACILITIES PRIOR TO CONSTRUCTION, TO TAKE NECESSARY PRECAUTIONS IN ORDER TO PROTECT ALL FACILITIES ENCOUNTERED. THE CONTRACTOR SHALL PRESERVE AND PROTECT ALL EXISTING UTILITIES FROM DAMAGE DURING CONSTRUCTION.

CALL 1-800-344-8377 (DIG-TEST) OR OTHER UTILITY LOCATION SERVICES 48 HOURS PRIOR TO CONSTRUCTION ACTIVITY. SPIARS ENGINEERING, INC. IS NOT RESPONSIBLE FOR KNOWING ALL EXISTING UTILITIES OR DEPICTING EXACT LOCATIONS OF UTILITIES ON DRAWINGS.

Benchmark No. 1

Top of the south end of a headwall being 21 feet north of the southeast corner of the subject tract (said southeast corner being in the approximate center line of County Road 56). Elevation = 668.10

Benchmark No. 2

Being a pk nail found at the centerline intersection of Mellanie Ct and Tolleson Drive. Elevation = 668.00

P-201402-01


spiars ENGINEERING
765 Custer Road, Suite 100 • Plano, TX 75075 • (972) 422-0077 • TBPE No. F-2121


STATE OF TEXAS
TIM C. SPIARS
LICENSED PROFESSIONAL ENGINEER
1/25/16

# PARKSIDE
CITY OF CELINA
COLLIN COUNTY, TEXAS
DRAINAGE AREA MAP

Issue Dates:

| Revisions | Date |
|---|---|
| Rev. H&B Trail & Sidewalks | 10/14/14 |
| Rev. H&B Trail & Sidewalks | 11/04/14 |

Scale: 1"=100'

Drawn By: RAS

Checked By: JMH

Sheet 10 of 26

SEI No. 13-157

Drawing: G:\2013 JOBS\13-157 Park Place Celina\Phase 1\13-157.dwg Saved By: Galaxie Saw Time: 1/25/2016 10:42:34 AM

Plotted by: galaxie Plot Date: 1/25/2016 3:13 PM

100 0 50 100 200

1 inch = 100ft.

## Legend

| | |
|---|---|
| A / 10.69 | = Basin Name |
| | = $Q_{100}$ |
| | = Drainage Area Divide |
| 600 | = Existing Contours |
| | = Direction Of Flow |

## Subdivision

C = 0.40 $I_{100}$ = 6.78 Tc = 20 min.

**Offsite Drainage Data**

| Basin | Acres | Tc | "I" | "C" | "CFS" |
|---|---|---|---|---|---|
| OS-1 | 18.83 | 20.00 | 6.78 | 0.40 | 51.06 |
| OS-2 | 16.26 | 20.00 | 6.78 | 0.40 | 44.08 |
| OS-3 | 1.21 | 20.00 | 6.78 | 0.40 | 3.29 |

AS-BUILT DRAWINGS

THIS DRAWING HAS BEEN REVISED TO CONFORM TO THE CONSTRUCTION RECORDS PROVIDED BY THE CONTRACTOR. ALIGNMENT AND GRADES SHOWN ON THIS DRAWING WERE NOT FIELD VERIFIED BY THE ENGINEER.

TIM C. SPIARS, P.E.

1/25/16

DATE

## CAUTION !!!

### EXISTING UTILITIES

EXISTING UTILITIES AND UNDERGROUND FACILITIES INDICATED ON THESE PLANS HAVE BEEN LOCATED FROM REFERENCE INFORMATION. IT SHALL BE THE RESPONSIBILITY OF THE CONTRACTOR TO VERIFY BOTH HORIZONTALLY AND VERTICALLY THE LOCATION OF ALL EXISTING UTILITIES AND UNDERGROUND FACILITIES PRIOR TO CONSTRUCTION, TO TAKE NECESSARY PRECAUTIONS IN ORDER TO PROTECT ALL FACILITIES ENCOUNTERED. THE CONTRACTOR SHALL PRESERVE AND PROTECT ALL EXISTING UTILITIES FROM DAMAGE DURING CONSTRUCTION.

CALL 1-800-344-8377 (DIG-TEST) OR OTHER UTILITY LOCATION SERVICES 48 HOURS PRIOR TO CONSTRUCTION ACTIVITY. SPIARS ENGINEERING, INC. IS NOT RESPONSIBLE FOR KNOWING ALL EXISTING UTILITIES OR DEPICTING EXACT LOCATIONS OF UTILITIES ON DRAWINGS.

Benchmark No. 1

Top of the south end of a headwall being 21 feet north of the southeast corner of the subject tract (said southeast corner being in the approximate center line of County Road 56). Elevation = 668.10

Benchmark No. 2

Being a pk nail found at the centerline intersection of Mellanie Ct and Tolleson Drive. Elevation = 668.00


spiars ENGINEERING
765 Custer Road, Suite 100 • Plano, TX 75075 • (972) 422-0077 • TBPE No. F-2121


STATE OF TEXAS
TIMOTHY C. SPIARS
84047
LICENSED PROFESSIONAL ENGINEER
1/25/16

# PARKSIDE

CITY OF CELINA
COLLIN COUNTY, TEXAS

OFFSITE DRAINAGE AREA MAP

Issue Dates:

| Date | Revisions |
|---|---|
| | |

Scale: 1"=100'

Drawn By: RAS

Checked By: JMH

Sheet 11 of 26

SEI No. 13-157


Drawing: Q:\2013 JOBS\13-157 Park Place Celina\Phase 1\13-157 Offsite drainage Saved By: Gautam Save Time: 7/22/2014 2:30:12 AM
Plotted by: gautam Plot Date: 1/25/2016 10:41 AM

| Upstream Station | Downstream Station | Distance Between Collection Point | Area No. | Total Area 'A' (Acres) | Area Picked Up (Acres) | Runoff Coefficient 'C' | Total Increment 'CA' | Bypass From Upstream 'CA' | Total To Collect 'CA' | Increment 'CA' Picked Up | Total Accumulated 'CA' | Accumulated 'CA' In System | Bypass 'CA' | Time At Upstream Station (MIN) | Design Storm (YRS.) | Intesity 'I' (IN/HR) | Storm Water Runoff 'Q' (CFS) | Slope Of Hydraulic Gradient 'S' (FT/FT) | Storm Sewer Size (IN) | Velocity In Sewer Between Points 'V' (FPS) | Velocity Head Loss (FEET) | Flow Time In Sewer (MIN) | Time At Down-Stream Station (MIN) | | Kj | HYD Grad Head Loss | HYD Grad Up-Stream (FT) | HYD Grad Down-Stream (FT) |
|---|---|---|---|---|---|---|---|---|---|---|---|---|---|---|---|---|---|---|---|---|---|---|---|---|---|---|---|---|
| LINE A | | | | | | | | | | | | | | | | | | | | | | | | | | | | 666.62 |
| 16 + 90.74 | 15 + 36.73 | 154.01 | OS1/OS2 | 35.09 | 35.09 | 0.40 | 14.04 | 0.00 | 14.04 | 14.04 | 14.04 | 14.04 | 0.00 | 20.00 | 100 | 6.78 | 95.19 | 0.0013 | 60 | 4.80 | 0.36 | 0.53 | 20.53 | | 1.25 | 0.45 | 666.17 | 665.96 |
| 15 + 36.73 | 11 + 50.11 | 386.62 | A1/Fut1 | 4.03 | 4.03 | 0.60 | 2.42 | 0.00 | 2.42 | 2.42 | 16.46 | 16.46 | 0.00 | 20.53 | 100 | 6.87 | 113.08 | 0.0019 | 60 | 5.80 | 0.52 | 1.11 | 21.64 | | 1.00 | 0.16 | 665.80 | 665.07 |
| 11 + 50.11 | 11 + 39.68 | 10.43 | 1/2 A2/A3 | 1.49 | 1.49 | 0.60 | 0.89 | 0.00 | 0.89 | 0.89 | 17.35 | 17.35 | 0.00 | 21.64 | 100 | 6.74 | 116.94 | 0.0020 | 60 | 6.00 | 0.56 | 0.03 | 21.67 | | 1.00 | 0.04 | 665.03 | 665.01 |
| 11 + 39.68 | 10 + 60.94 | 78.74 | 1/2 A2/A3 | 1.48 | 1.48 | 0.60 | 0.89 | 0.00 | 0.89 | 0.89 | 18.24 | 18.24 | 0.00 | 21.67 | 100 | 6.73 | 122.76 | 0.0022 | 60 | 6.30 | 0.62 | 0.21 | 21.88 | | 1.00 | 0.06 | 664.95 | 664.78 |
| 10 + 60.94 | 8 + 71.84 | 189.10 | Fut 2 | 4.69 | 4.69 | 0.60 | 2.81 | 0.00 | 2.81 | 2.81 | 21.05 | 21.05 | 0.00 | 21.88 | 100 | 6.71 | 141.25 | 0.0029 | 60 | 7.20 | 0.8 | 0.44 | 22.32 | | 1.00 | 0.18 | 664.60 | 664.04 |
| 8 + 71.84 | 8 + 62.03 | 9.81 | 1/2 A4/A5 | 0.42 | 0.42 | 0.60 | 0.25 | 0.00 | 0.25 | 0.25 | 21.30 | 21.30 | 0.00 | 22.32 | 100 | 6.66 | 141.86 | 0.0010 | 8'x4' | 4.40 | 0.3 | 0.04 | 22.36 | | 1.00 | -0.25 | 664.29 | 664.28 |
| 8 + 62.03 | 7 + 67.86 | 94.17 | 1/2 A4/A5 | 0.41 | 0.41 | 0.60 | 0.25 | 0.00 | 0.25 | 0.25 | 21.55 | 21.55 | 0.00 | 22.36 | 100 | 6.65 | 143.31 | 0.0010 | 8'x4' | 4.50 | 0.31 | 0.35 | 22.71 | | 0.25 | 0.24 | 664.05 | 663.95 |
| 7 + 67.86 | 4 + 75.56 | 292.30 | B1/B2 | 3.80 | 3.80 | 0.60 | 2.28 | 0.00 | 2.28 | 2.28 | 23.83 | 23.83 | 0.00 | 22.71 | 100 | 6.61 | 157.52 | 0.0013 | 8'x4' | 4.90 | 0.37 | 0.99 | 23.70 | | 0.35 | 0.26 | 663.69 | 663.32 |
| 4 + 75.56 | 4 + 12.23 | 63.33 | C1/C2 | 3.03 | 3.03 | 0.60 | 1.82 | 0.00 | 1.82 | 1.82 | 25.65 | 25.65 | 0.00 | 23.70 | 100 | 6.49 | 166.47 | 0.0014 | 8'x4' | 5.20 | 0.42 | 0.20 | 23.90 | | 0.35 | 0.29 | 663.03 | 662.94 |
| 4 + 12.23 | 4 + 2.41 | 9.82 | 1/2 A6/A7 | 1.08 | 1.08 | 0.60 | 0.65 | 0.00 | 0.65 | 0.65 | 26.30 | 26.30 | 0.00 | 23.90 | 100 | 6.47 | 170.16 | 0.0015 | 8'x4' | 5.30 | 0.44 | 0.03 | 23.93 | | 0.35 | 0.29 | 662.65 | 662.63 |
| 4 + 2.41 | 1 + 53.78 | 248.63 | 1/2 A6/A7 | 1.07 | 1.07 | 0.60 | 0.64 | 0.00 | 0.64 | 0.64 | 26.94 | 26.94 | 0.00 | 23.93 | 100 | 6.47 | 174.30 | 0.0015 | 8'x4' | 5.40 | 0.45 | 0.77 | 24.70 | | 0.35 | 0.30 | 662.33 | 661.95 |
| 1 + 53.78 | 0 + 0.00 | 153.78 | D1/D2/D3/D4 | 6.86 | 6.86 | 0.60 | 4.12 | 0.00 | 4.12 | 4.12 | 31.06 | 31.06 | 0.00 | 24.70 | 100 | 6.38 | 198.16 | 0.0020 | 8'x4' | 6.20 | 0.6 | 0.41 | 25.11 | | 0.35 | 0.44 | 661.51 | 661.20 |
| 0 + 0.00 | | | | | | | | | | | | | | | | | | | | | | | | | | | | |
| LINE B | | | | | | | | | | | | | | | | | | | | | | | | | | | | 664.02 |
| 1 + 88.22 | 1 + 68.40 | 19.82 | 1/2 B1/B2 | 1.90 | 1.90 | 0.60 | 1.14 | 0.00 | 1.14 | 1.14 | 1.14 | 1.14 | 0.00 | 15.00 | 100 | 7.52 | 8.57 | 0.0029 | 21 | 3.60 | 0.20 | 0.09 | 15.09 | | 1.25 | 0.25 | 663.77 | 663.71 |
| 1 + 68.44 | 0 + 0.00 | 168.44 | 1/2 B1/B2 | 1.90 | 1.90 | 0.60 | 1.14 | 0.00 | 1.14 | 1.14 | 2.28 | 2.28 | 0.00 | 15.09 | 100 | 7.51 | 17.12 | 0.0003 | 42 | 1.80 | 0.05 | 1.56 | 16.65 | | 1.00 | -0.08 | 663.79 | 663.74 |
| 0 + 0.00 | | | | | | | | | | | | | | | | | | | | | | | | | | 0.05 | 663.69 | |
| LINE C | | | | | | | | | | | | | | | | | | | | | | | | | | | | 663.20 |
| 1 + 84.88 | 1 + 67.32 | 17.56 | 1/2 C1/C2 | 1.52 | 1.52 | 0.60 | 0.91 | 0.00 | 0.91 | 0.91 | 0.91 | 0.91 | 0.00 | 15.00 | 100 | 7.52 | 6.84 | 0.0019 | 21 | 2.80 | 0.12 | 0.10 | 15.10 | | 1.25 | 0.15 | 663.05 | 663.01 |
| 1 + 67.32 | 0 + 0.00 | 167.32 | 1/2 C1/C2 | 1.51 | 1.51 | 0.60 | 0.91 | 0.00 | 0.91 | 0.91 | 1.82 | 1.82 | 0.00 | 15.10 | 100 | 7.51 | 13.67 | 0.0001 | 48 | 1.10 | 0.02 | 2.54 | 17.64 | | 1.00 | -0.05 | 663.06 | 663.05 |
| 0 + 0.00 | | | | | | | | | | | | | | | | | | | | | | | | | | 0.02 | 663.03 | |
| LINE D | | | | | | | | | | | | | | | | | | | | | | | | | | | | 662.58 |
| 5 + 20.85 | 4 + 98.22 | 22.63 | 1/2 D1/D2 | 2.01 | 2.01 | 0.60 | 1.21 | 0.00 | 1.21 | 1.21 | 1.21 | 1.21 | 0.00 | 15.00 | 100 | 7.52 | 9.10 | 0.0033 | 21 | 3.80 | 0.22 | 0.10 | 15.10 | | 1.25 | 0.28 | 662.30 | 662.23 |
| 4 + 98.22 | 1 + 19.27 | 378.95 | 1/2 D1/D2 | 2.01 | 2.01 | 0.60 | 1.21 | 0.00 | 1.21 | 1.21 | 2.42 | 2.42 | 0.00 | 15.10 | 100 | 7.51 | 18.17 | 0.0020 | 30 | 3.70 | 0.21 | 1.71 | 16.81 | | 1.00 | -0.01 | 662.23 | 661.49 |
| 1 + 19.27 | 1 + 9.45 | 9.82 | 1/2 D3/D4 | 1.42 | 1.42 | 0.60 | 0.85 | 0.00 | 0.85 | 0.85 | 3.27 | 3.27 | 0.00 | 16.81 | 100 | 7.31 | 23.90 | 0.0003 | 60 | 1.20 | 0.02 | 0.14 | 16.95 | | 1.25 | -0.12 | 661.61 | 661.61 |
| 1 + 9.45 | 0 + 0.00 | 109.45 | 1/2 D3/D4 | 1.42 | 1.42 | 0.60 | 0.85 | 0.00 | 0.85 | 0.85 | 4.12 | 4.12 | 0.00 | 16.95 | 100 | 7.29 | 30.03 | 0.0005 | 60 | 1.50 | 0.03 | 1.22 | 18.17 | | 1.00 | 0.01 | 661.60 | 661.54 |
| 0 + 0.00 | | | | | | | | | | | | | | | | | | | | | | | | | | 0.03 | 661.51 | |
| LINE E | | | | | | | | | | | | | | | | | | | | | | | | | | | | 665.06 |
| 15 + 74.57 | 15 + 54.21 | 20.36 | 1/2 Fut 3/4 | 1.99 | 1.99 | 0.60 | 1.19 | 0.00 | 1.19 | 1.19 | 1.19 | 1.19 | 0.00 | 15.00 | 100 | 7.52 | 8.95 | 0.0032 | 21 | 3.70 | 0.21 | 0.09 | 15.09 | | 1.25 | 0.26 | 664.79 | 664.73 |
| 15 + 54.21 | 10 + 92.59 | 461.62 | 1/2 Fut 3/4 | 1.99 | 1.99 | 0.60 | 1.19 | 0.00 | 1.19 | 1.19 | 2.38 | 2.38 | 0.00 | 15.09 | 100 | 7.51 | 17.87 | 0.0019 | 30 | 3.60 | 0.2 | 2.14 | 17.23 | | 1.00 | 0.00 | 664.73 | 663.86 |
| 10 + 92.59 | 10 + 2.40 | 90.19 | Fut 6/7 | 3.35 | 3.35 | 0.60 | 2.01 | 0.00 | 2.01 | 2.01 | 4.39 | 4.39 | 0.00 | 17.23 | 100 | 7.26 | 31.87 | 0.0060 | 30 | 6.50 | 0.66 | 0.23 | 17.46 | | 1.00 | 0.46 | 663.40 | 662.85 |
| 10 + 2.40 | 9 + 92.59 | 9.81 | 1/2 Fut 5/8 | 1.14 | 1.14 | 0.60 | 0.68 | 0.00 | 0.68 | 0.68 | 5.07 | 5.07 | 0.00 | 17.46 | 100 | 7.23 | 36.66 | 0.0013 | 42 | 3.80 | 0.22 | 0.04 | 17.50 | | 1.00 | -0.22 | 663.07 | 663.06 |
| 9 + 92.59 | 8 + 2.23 | 190.36 | 1/2 Fut 5/8 | 1.14 | 1.14 | 0.60 | 0.68 | 0.00 | 0.68 | 0.68 | 5.75 | 5.75 | 0.00 | 17.50 | 100 | 7.23 | 41.57 | 0.0008 | 48 | 3.30 | 0.17 | 0.96 | 18.46 | | 1.00 | -0.03 | 663.09 | 662.93 |
| 8 + 2.23 | 5 + 68.25 | 233.98 | Fut 9/10 | 2.35 | 2.35 | 0.60 | 1.41 | 0.00 | 1.41 | 1.41 | 7.16 | 7.16 | 0.00 | 18.46 | 100 | 7.11 | 50.91 | 0.0013 | 48 | 4.10 | 0.26 | 0.95 | 19.41 | | 1.00 | 0.09 | 662.84 | 662.54 |
| 5 + 68.25 | 5 + 58.92 | 9.33 | 1/2 Fut12/E1 | 1.65 | 1.65 | 0.60 | 0.99 | 0.00 | 0.99 | 0.99 | 8.15 | 8.15 | 0.00 | 19.41 | 100 | 7 | 57.05 | 0.0008 | 54 | 3.60 | 0.2 | 0.04 | 19.45 | | 0.25 | 0.14 | 662.41 | 662.40 |
| 5 + 58.92 | 1 + 32.38 | 426.54 | 1/2 Fut12/E1 | 1.64 | 1.64 | 0.60 | 0.98 | 0.00 | 0.98 | 0.98 | 9.13 | 9.13 | 0.00 | 19.45 | 100 | 6.99 | 63.82 | 0.0011 | 54 | 4.00 | 0.25 | 1.78 | 21.23 | | 0.35 | 0.18 | 662.22 | 661.77 |
| 1 + 32.38 | 1 + 17.50 | 14.88 | /2E2/E3/Fut1 | 1.18 | 1.18 | 0.60 | 0.71 | 0.00 | 0.71 | 0.71 | 9.84 | 9.84 | 0.00 | 21.23 | 100 | 6.78 | 66.72 | 0.0012 | 54 | 4.20 | 0.27 | 0.06 | 21.29 | | 0.35 | 0.18 | 661.59 | 661.57 |
| 1 + 17.50 | 0 + 0.00 | 117.50 | /2E2/E3Fut1 | 1.18 | 1.18 | 0.60 | 0.71 | 0.00 | 0.71 | 0.71 | 10.55 | 10.55 | 0.00 | 21.29 | 100 | 6.78 | 71.53 | 0.0013 | 54 | 4.50 | 0.31 | 0.44 | 21.73 | | 0.35 | 0.22 | 661.36 | 661.20 |
| 0 + 0.00 | | | | | | | | | | | | | | | | | | | | | | | | | | | | |
| LINE F | | | | | | | | | | | | | | | | | | | | | | | | | | | | 660.85 |
| 1 + 21.50 | 0 + 47.00 | 74.50 | Pond | 85.86 | 85.86 | 0.40 | 34.34 | 0.00 | 34.34 | 34.34 | 34.34 | 34.34 | 0.00 | 20.00 | 100 | 6.78 | 232.83 | 0.0032 | 2-5'x3' | 6.50 | 0.66 | 0.19 | 20.19 | | 0.50 | 0.33 | 660.52 | 660.28 |
| 0 + 48.23 | 0 + 0.00 | 48.23 | OS1/F1,2,3 | 4.19 | 4.19 | 0.40 | 1.68 | 0.00 | 1.68 | 1.68 | 36.02 | 36.02 | 0.00 | 20.19 | 100 | 6.91 | 248.90 | 0.0037 | 2-5'x3' | 6.90 | 0.74 | 0.12 | 20.31 | | 0.40 | 0.48 | 659.81 | 659.63 |
| 0 + 0.00 | | | | | | | | | | | | | | | | | | | | | | | | | | | | |

## INLET CALCULATIONS

| No. | Inlet Location – Street Name | Design Storm Frequency (YEARS) | Area Runoff - Q=CIA: Time Of "C" (MIN) | Intensity (In/Hr) "I" | Runoff Coefficient "C" | Area In Acres "A" | Runoff (CFS) "Q" | Carry Over From Upstream Inlet (CFS) | Total Gutter Flow (CFS) | Gutter Slope (CFS) | Gutter Capacity To Crown (CFS) | Pavement Capacity To TC (CFS) | Crown Type | Selected Inlets: Length 'LI' (FEET) | Type | Inlet Capacity (CFS) | Intercepted Flow (CFS) | Carry Over To Downstream Inlet (CFS) | Downstream Inlet No. |
|---|---|---|---|---|---|---|---|---|---|---|---|---|---|---|---|---|---|---|---|
| 1 | 3+00.00 Zion Parkway | 100 | 15 | 7.52 | 0.6 | 0.98 | 4.40 | 0.00 | 4.40 | Sag | N/A | N/A | 5" Par. | 10 | Curb | 20.00 | 4.40 | 0.00 | |
| 2 | 3+00.00 Zion Parkway | 100 | 15 | 7.52 | 0.6 | 0.98 | 4.40 | 0.00 | 4.40 | Sag | N/A | N/A | 5" Par. | 10 | Curb | 20.00 | 4.40 | 0.00 | |
| 3 | 5+01.20 Olympic Drive | 100 | 15 | 7.52 | 0.6 | 2.01 | 9.07 | 0.00 | 9.07 | Sag | N/A | N/A | 5" Par. | 10 | Curb | 20.00 | 9.07 | 0.00 | |
| 4 | 5+01.20 Olympic Drive | 100 | 15 | 7.52 | 0.6 | 2.01 | 9.07 | 0.00 | 9.07 | Sag | N/A | N/A | 5" Par. | 10 | Curb | 20.00 | 9.07 | 0.00 | |
| 5 | 1+00.00 Olympic Drive | 100 | 15 | 7.52 | 0.6 | 1.43 | 6.43 | 0.00 | 6.43 | Sag | N/A | N/A | 5" Par. | 10 | Curb | 20.00 | 6.43 | 0.00 | |
| 6 | 1+00.00 Olympic Drive | 100 | 15 | 7.52 | 0.6 | 1.43 | 6.43 | 0.00 | 6.43 | Sag | N/A | N/A | 5" Par. | 10 | Curb | 20.00 | 6.43 | 0.00 | |
| 7 | 7+75.80 Hot Springs Way | 100 | 15 | 7.52 | 0.6 | 1.52 | 6.86 | 0.00 | 6.86 | Sag | N/A | N/A | 5" Par. | 10 | Curb | 20.00 | 6.86 | 0.00 | |
| 8 | 7+75.80 Hot Springs Way | 100 | 15 | 7.52 | 0.6 | 1.52 | 6.86 | 0.00 | 6.86 | Sag | N/A | N/A | 5" Par. | 10 | Curb | 20.00 | 6.86 | 0.00 | |
| 9 | 1+99.49 Bryce Canyon Drive | 100 | 15 | 7.52 | 0.6 | 1.90 | 8.57 | 0.00 | 8.57 | Sag | N/A | N/A | 5" Par. | 10 | Curb | 20.00 | 8.57 | 0.00 | |
| 10 | 1+99.49 Bryce Canyon Drive | 100 | 15 | 7.52 | 0.6 | 1.90 | 8.57 | 0.00 | 8.57 | Sag | N/A | N/A | 5" Par. | 10 | Curb | 20.00 | 8.57 | 0.00 | |
| 11 | 3+03.33 Hot Springs Way | 100 | 15 | 7.52 | 0.6 | 0.70 | 3.14 | 0.00 | 3.14 | Sag | N/A | N/A | 5" Par. | 10 | Curb | 20.00 | 3.14 | 0.00 | |
| 12 | 3+03.33 Hot Springs Way | 100 | 15 | 7.52 | 0.6 | 0.70 | 3.14 | 0.00 | 3.14 | Sag | N/A | N/A | 5" Par. | 10 | Curb | 20.00 | 3.14 | 0.00 | |
| 13 | End of Yellowstone Drive | 100 | 20 | 6.78 | 0.4 | 12.80 | 34.71 | 0.00 | N/A | Sag | N/A | N/A | N/A | 4'x4' | "Y" | 44.00 | 34.71 | 0.00 | |
| 14 | Parkway (Road Ditch FM428) | 100 | 20 | 6.78 | 0.4 | 4.19 | 16.07 | 0.00 | N/A | Sag | N/A | N/A | N/A | 3'x3' | "Y" | 33.00 | 16.07 | 0.00 | |
| 15 | End of Zion Parkway | 100 | 20 | 6.78 | 0.4 | 24.00 | 65.09 | 0.00 | N/A | Sag | N/A | N/A | N/A | 6'x6' | "Y" | 66.00 | 66.00 | 0.00 | |

### AS-BUILT DRAWINGS

THIS DRAWING HAS BEEN REVISED TO CONFORM TO THE CONSTRUCTION RECORDS PROVIDED BY THE CONTRACTOR. ALIGNMENT AND GRADES SHOWN ON THIS DRAWING WERE NOT FIELD VERIFIED BY THE ENGINEER.

TIM C. SPIARS, P.E.

1/25/16
DATE

### CAUTION !!!
### EXISTING UTILITIES

EXISTING UTILITIES AND UNDERGROUND FACILITIES INDICATED ON THESE PLANS HAVE BEEN LOCATED FROM REFERENCE INFORMATION. IT SHALL BE THE RESPONSIBILITY OF THE CONTRACTOR TO VERIFY BOTH HORIZONTALLY AND VERTICALLY THE LOCATION OF ALL EXISTING UTILITIES AND UNDERGROUND FACILITIES PRIOR TO CONSTRUCTION, TO TAKE NECESSARY PRECAUTIONS IN ORDER TO PROTECT ALL FACILITIES ENCOUNTERED. THE CONTRACTOR SHALL PRESERVE AND PROTECT ALL EXISTING UTILITIES FROM DAMAGE DURING CONSTRUCTION.

CALL 1-800-344-8377 (DIG-TEST) OR OTHER UTILITY LOCATION SERVICES 48 HOURS PRIOR TO CONSTRUCTION ACTIVITY. SPIARS ENGINEERING, INC. IS NOT RESPONSIBLE FOR KNOWING ALL EXISTING UTILITIES OR DEPICTING EXACT LOCATIONS OF UTILITIES ON DRAWINGS.

Benchmark No. 1

Top of the south end of a headwall being 21 feet north of the southeast corner of the subject tract (said southeast corner being in the approximate center line of County Road 56). Elevation = 668.10

Benchmark No. 2

Being a pk nail found at the centerline intersection of Mellanie Ct and Tolleson Drive. Elevation = 668.00

P-201402-01


spiars ENGINEERING
765 Custer Road, Suite 100 • Plano, TX 75075 • (972) 422-0077 • TBPE No. F-2121


STATE OF TEXAS — TIM C. SPIARS — 84017 — LICENSED PROFESSIONAL ENGINEER — 1/25/16

# PARKSIDE
CITY OF CELINA
COLLIN COUNTY, TEXAS
## DRAINAGE CALCULATIONS

Issue Dates:

Date | Revisions

Scale: NA
Drawn By: RAS
Checked By: JMH

Sheet 12 of 26

SEI No. 13-157

Plotted by: gdutton Plot Date: 1/25/2016 3:32 PM
Drawing: G:\2013 JOBS\13-157 Park Place Celina\Phase 1\13-157 da.dwg Saved By: Gdutton Save Time: 1/25/2016 10:42:34 AM

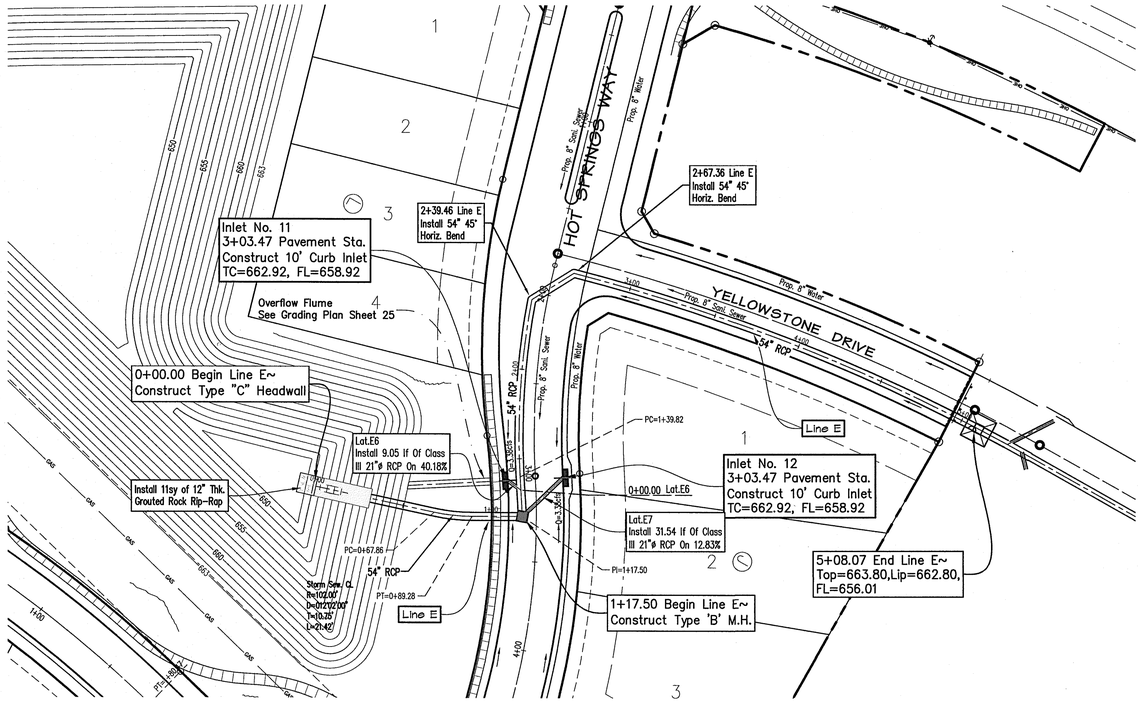


40 0 20 40 80
1 inch = 40ft.

## Legend

- Barrier Free Ramp
- Flow Arrow
- Proposed Water
- Proposed Sanitary Sewer With Manhole
- Proposed Storm Sewer Manhole With Inlet
- 7 (C) Lot and Block Designation
- Utility Easement
- Building Setback Line

Benchmark No. 1

Top of the south end of a headwall being 21 feet north of the southeast corner of the subject tract (said southeast corner being in the approximate center line of County Road 56). Elevation = 668.10

Benchmark No. 2

Being a pk nail found at the centerline intersection of Mellanie Ct and Tolleson Drive. Elevation = 668.00

## CAUTION !!!
### EXISTING UTILITIES

EXISTING UTILITIES AND UNDERGROUND FACILITIES INDICATED ON THESE PLANS HAVE BEEN LOCATED FROM REFERENCE INFORMATION. IT SHALL BE THE RESPONSIBILITY OF THE CONTRACTOR TO VERIFY BOTH HORIZONTALLY AND VERTICALLY THE LOCATION OF ALL EXISTING UTILITIES AND UNDERGROUND FACILITIES PRIOR TO CONSTRUCTION, TO TAKE NECESSARY PRECAUTIONS IN ORDER TO PROTECT ALL FACILITIES ENCOUNTERED. THE CONTRACTOR SHALL PRESERVE AND PROTECT ALL EXISTING UTILITIES FROM DAMAGE DURING CONSTRUCTION.

CALL 1-800-344-8377 (DIG-TESS) OR OTHER UTILITY LOCATION SERVICES 48 HOURS PRIOR TO CONSTRUCTION ACTIVITY. SPIARS ENGINEERING, INC. IS NOT RESPONSIBLE FOR KNOWING ALL EXISTING UTILITIES OR DEPICTING EXACT LOCATIONS OF UTILITIES ON DRAWINGS.

Note
See Sheets Det. 8-10
For Typical Storm Sewer
Details.

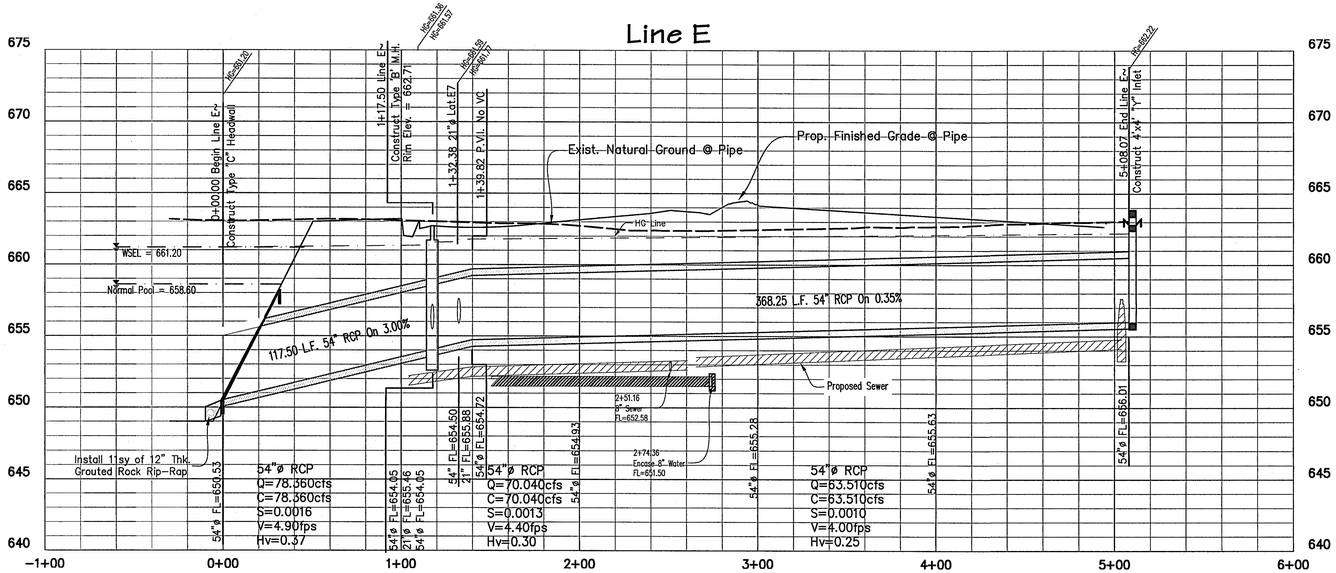


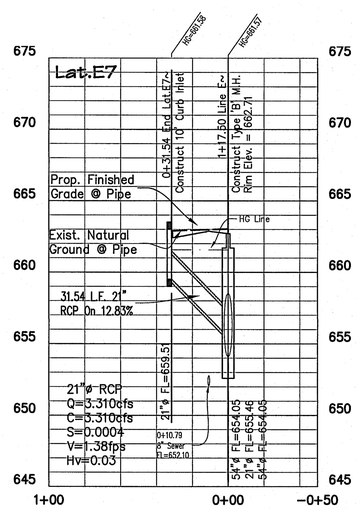


## AS-BUILT DRAWINGS

THIS DRAWING HAS BEEN REVISED TO CONFORM TO THE CONSTRUCTION RECORDS PROVIDED BY THE CONTRACTOR. ALIGNMENT AND GRADES SHOWN ON THIS DRAWING WERE NOT FIELD VERIFIED BY THE ENGINEER.

TIM C. SPIARS, P.E.

1/25/16
DATE

P-201402-01


spiars ENGINEERING
765 Custer Road, Suite 100 • Plano, TX 75075 • (972) 422-0077 • TBPE No. F-2121


# PARKSIDE
CITY OF CELINA
COLLIN COUNTY, TEXAS
STORM SEWER PLAN & PROFILE

Issue Dates:

| Revisions | Date |
|---|---|
| Revised H&B Trail & Sidewalks | 10/14/14 |
| Revised H&B Trail & Sidewalks | 11/04/14 |

Scale: 1"=40'H, 1=5'V
Drawn By: RAS
Checked By: JMH
Sheet 13 of 26
SEI No. 13-157

Plotted by: gbatton Plot Date: 1/25/2016 10:39 AM
Drawing: Q:\2013 JOBS\13-157 Pres Ranch\Phase 1\13-157 storm 1.dwg Saved By: Gbatton Save Time: 4/2/2015 9:23:15 AM

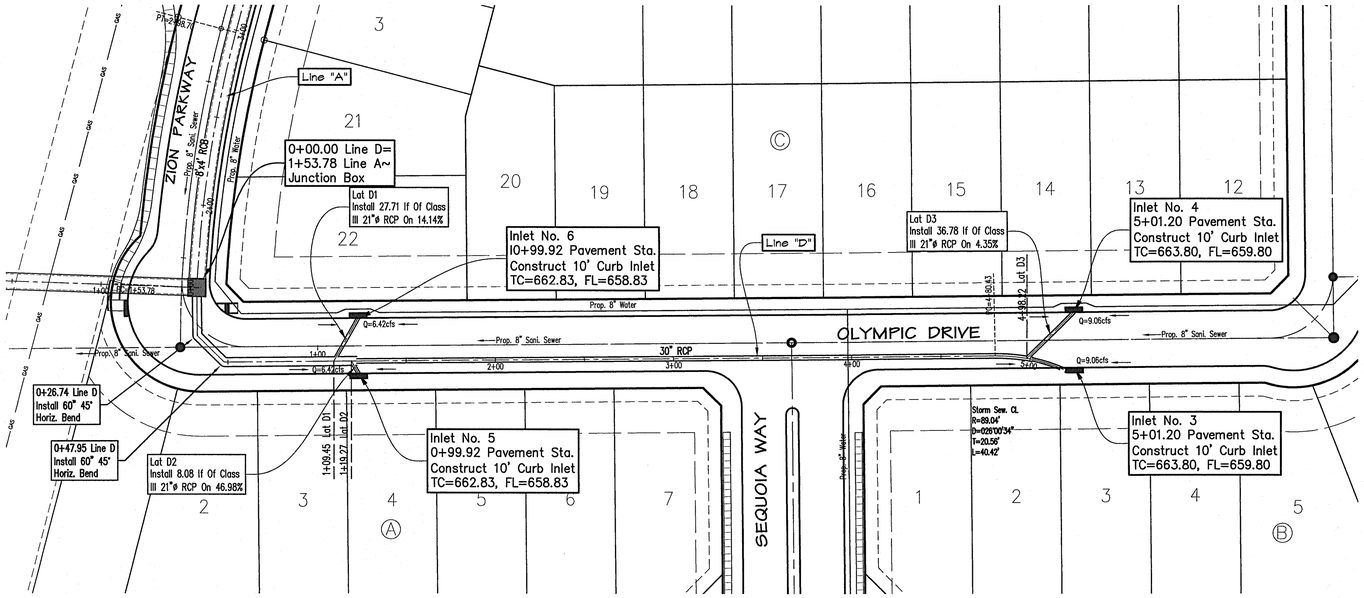


40 0 20 40 80

1 inch = 40ft.

## Legend

- Barrier Free Ramp
- Flow Arrow
- Proposed Water
- Proposed Sanitary Sewer With Manhole
- Proposed Storm Sewer Manhole With Inlet
- 7 (C) Lot and Block Designation
- Utility Easement
- Building Setback Line

## CAUTION !!!
### EXISTING UTILITIES

EXISTING UTILITIES AND UNDERGROUND FACILITIES INDICATED ON THESE PLANS HAVE BEEN LOCATED FROM REFERENCE INFORMATION. IT SHALL BE THE RESPONSIBILITY OF THE CONTRACTOR TO VERIFY BOTH HORIZONTALLY AND VERTICALLY THE LOCATION OF ALL EXISTING UTILITIES AND UNDERGROUND FACILITIES PRIOR TO CONSTRUCTION, TO TAKE NECESSARY PRECAUTIONS IN ORDER TO PROTECT ALL FACILITIES ENCOUNTERED. THE CONTRACTOR SHALL PRESERVE AND PROTECT ALL EXISTING UTILITIES FROM DAMAGE DURING CONSTRUCTION.

CALL 1-800-344-8377 (DIG-TESS) OR OTHER UTILITY LOCATION SERVICES 48 HOURS PRIOR TO CONSTRUCTION ACTIVITY. SPIARS ENGINEERING, INC. IS NOT RESPONSIBLE FOR KNOWING ALL EXISTING UTILITIES OR DEPICTING EXACT LOCATIONS OF UTILITIES ON DRAWINGS.

AS-BUILT DRAWINGS

THIS DRAWING HAS BEEN REVISED TO CONFORM TO THE CONSTRUCTION RECORDS PROVIDED BY THE CONTRACTOR. ALIGNMENT AND GRADES SHOWN ON THIS DRAWING WERE NOT FIELD VERIFIED BY THE ENGINEER.

TIM C. SPIARS, P.E.

1/25/16

DATE

Benchmark No. 1

Top of the south end of a headwall being 21 feet north of the southeast corner of the subject tract (said southeast corner being in the approximate center line of County Road 56). Elevation = 668.10

Benchmark No. 2

Being a pk nail found at the centerline intersection of Mellanie Ct and Tolleson Drive. Elevation = 668.00

Note
See Sheets Det. 8-10
For Typical Storm Sewer
Details.

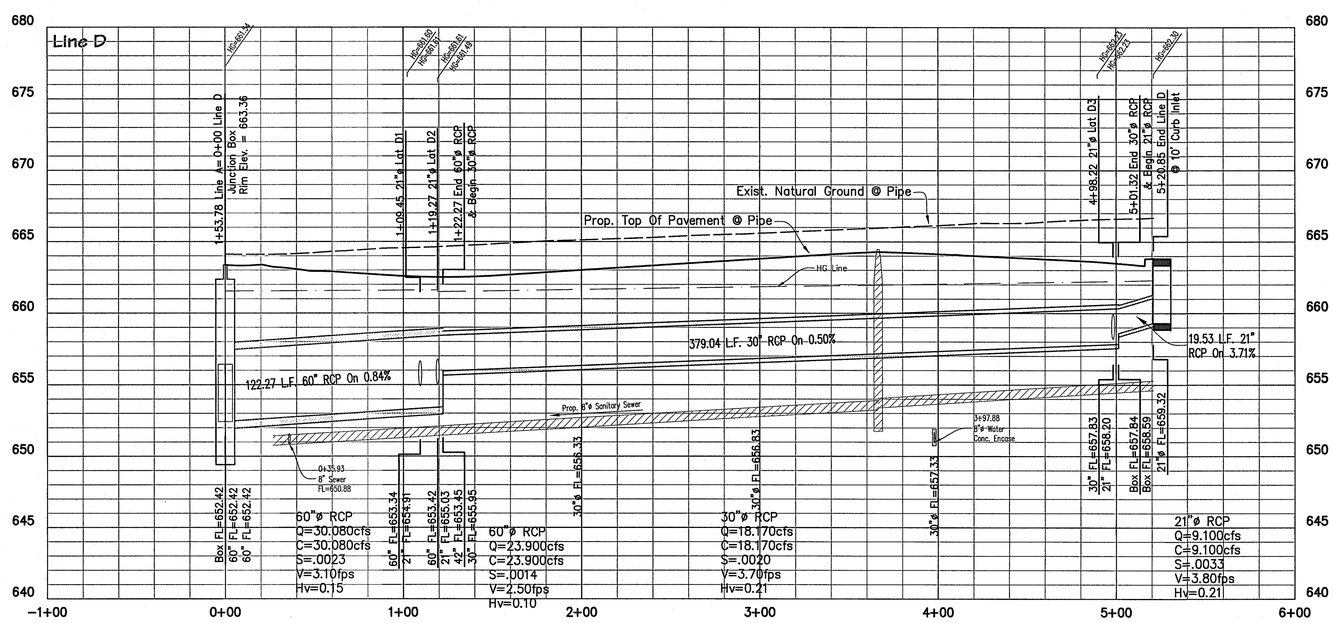


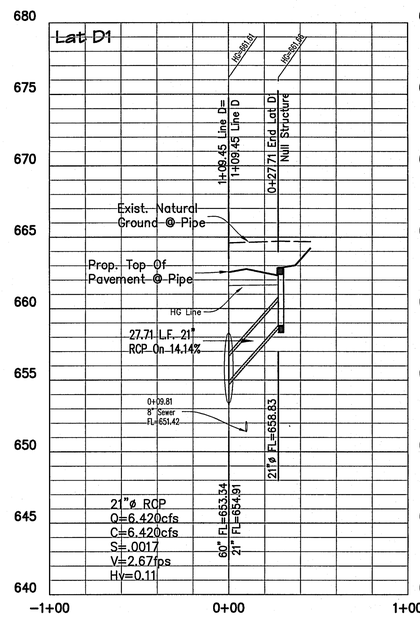


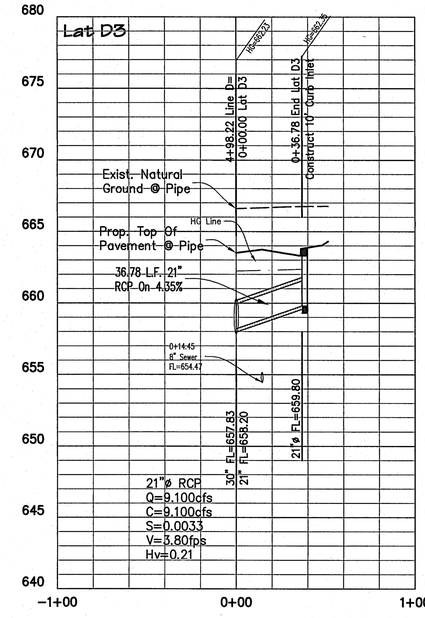


P-201402-01


spiars ENGINEERING
765 Custer Road, Suite 100 • Plano, TX 75075 • (972) 422-0077 • TBPE No. F-2121


# PARKSIDE
CITY OF CELINA
COLLIN COUNTY, TEXAS
STORM SEWER PLAN & PROFILE

Issue Dates:

| Revisions | Date |
|---|---|
| Revised H&B Trail & Sidewalks | 10/14/14 |
| Revised H&B Trail & Sidewalks | 11/24/14 |

Scale: 1"=40'H, 1=5'V

Drawn By: RAS

Checked By: JMH

Sheet 14 of 26

SEI No. 13-157

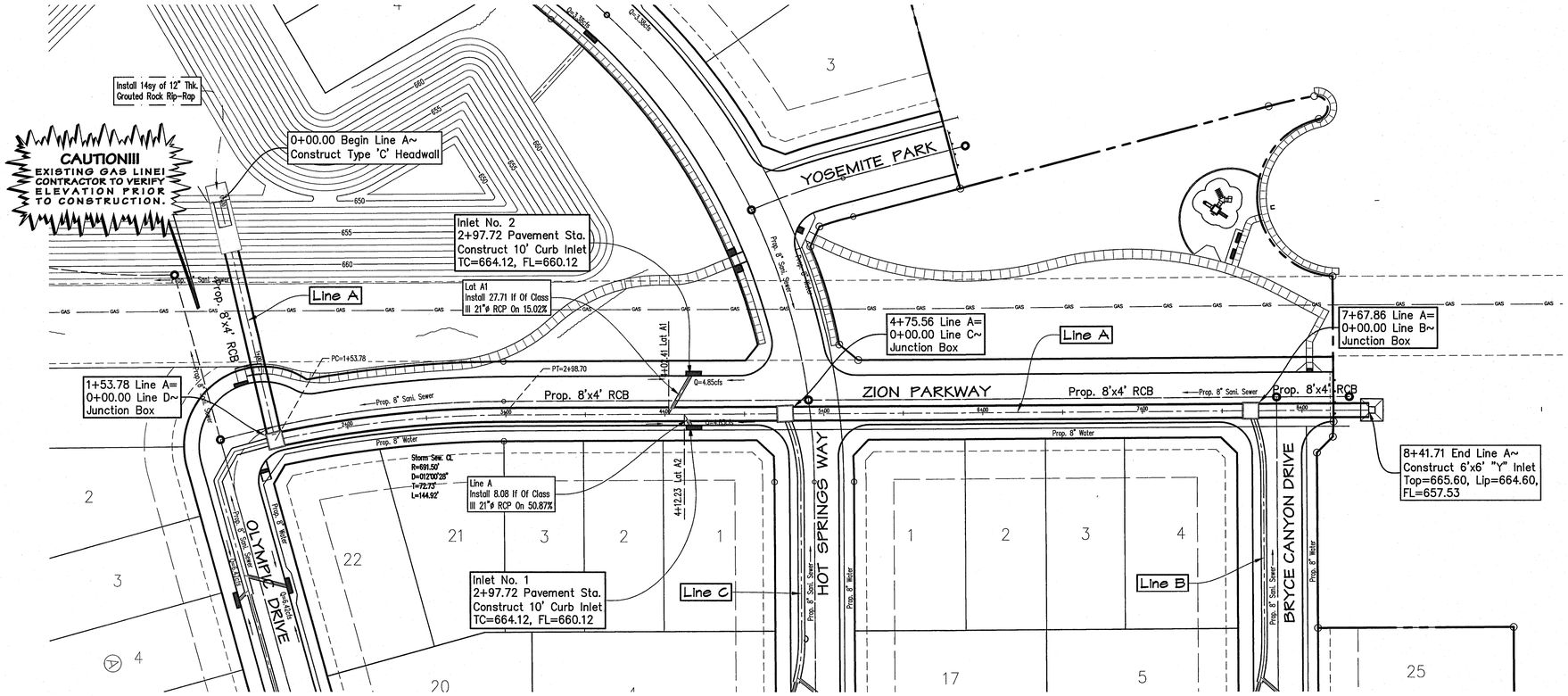


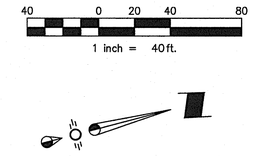


**Legend**

- Barrier Free Ramp
- Flow Arrow
- Proposed Water
- Proposed Sanitary Sewer With Manhole
- Proposed Storm Sewer Manhole With Inlet
- 7 (C) Lot and Block Designation
- Utility Easement
- Building Setback Line

Note
See Sheets Det. 3,4, and 8-10 For Typical Storm Sewer Details.

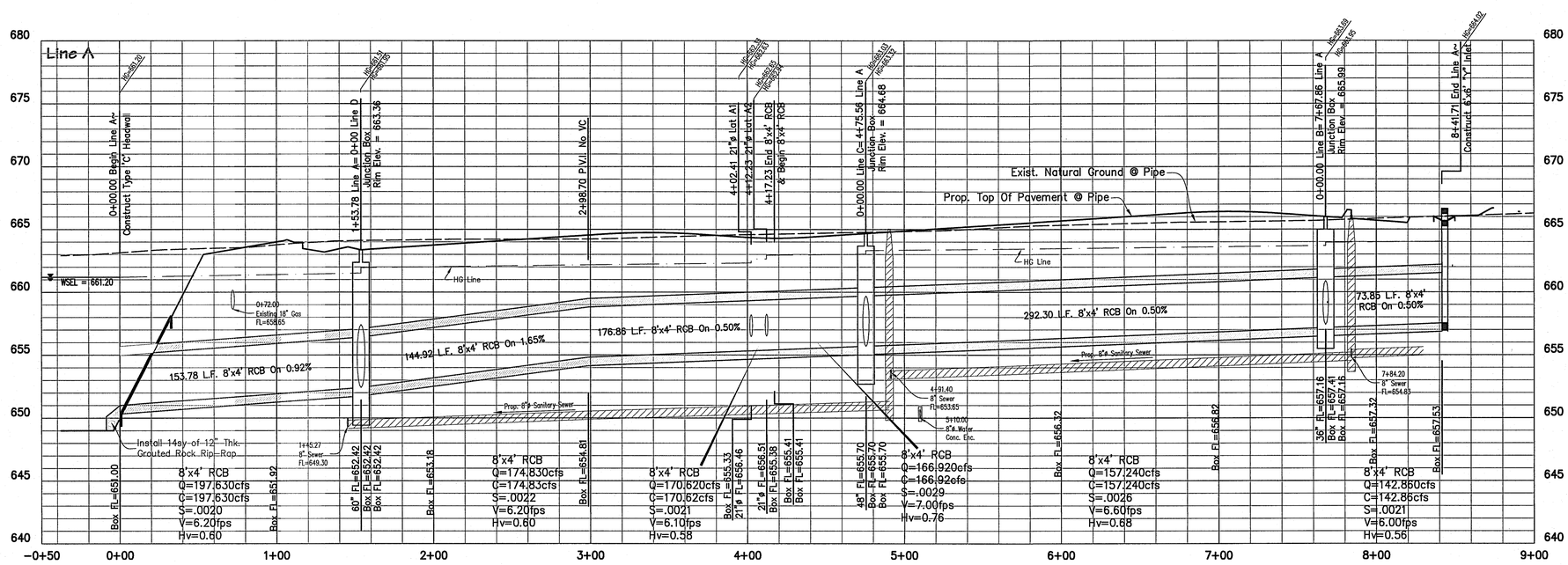


## AS-BUILT DRAWINGS

THIS DRAWING HAS BEEN REVISED TO CONFORM TO THE CONSTRUCTION RECORDS PROVIDED BY THE CONTRACTOR. ALIGNMENT AND GRADES SHOWN ON THIS DRAWING WERE NOT FIELD VERIFIED BY THE ENGINEER.

TIM C. SPIARS P.E.

1/25/16
DATE

## CAUTION !!!
### EXISTING UTILITIES

EXISTING UTILITIES AND UNDERGROUND FACILITIES INDICATED ON THESE PLANS HAVE BEEN LOCATED FROM REFERENCE INFORMATION. IT SHALL BE THE RESPONSIBILITY OF THE CONTRACTOR TO VERIFY BOTH HORIZONTALLY AND VERTICALLY THE LOCATION OF ALL EXISTING UTILITIES AND UNDERGROUND FACILITIES PRIOR TO CONSTRUCTION, TO TAKE NECESSARY PRECAUTIONS IN ORDER TO PROTECT ALL FACILITIES ENCOUNTERED. THE CONTRACTOR SHALL PRESERVE AND PROTECT ALL EXISTING UTILITIES FROM DAMAGE DURING CONSTRUCTION.

CALL 1-800-344-8377 (DIG-TESS) OR OTHER UTILITY LOCATION SERVICES 48 HOURS PRIOR TO CONSTRUCTION ACTIVITY. SPIARS ENGINEERING, INC. IS NOT RESPONSIBLE FOR KNOWING ALL EXISTING UTILITIES OR DEPICTING EXACT LOCATIONS OF UTILITIES ON DRAWINGS.

Benchmark No. 1

Top of the south end of a headwall being 21 feet north of the southeast corner of the subject tract (said southeast corner being in the approximate center line of County Road 56). Elevation = 668.10

Benchmark No. 2

Being a pk nail found at the centerline intersection of Mellanie Ct and Tolleson Drive. Elevation = 668.00

P-201402-01


spiars ENGINEERING
765 Custer Road, Suite 100 • Plano, TX 75075 • (972) 422-0077 • TBPE No. F-2121


1/25/16

# PARKSIDE
CITY OF CELINA
COLLIN COUNTY, TEXAS
STORM SEWER PLAN & PROFILE

Issue Dates:

| Revisions | Date |
|---|---|
| Revised H&B Trail & Sidewalks | 10/14/14 |
| Revised H&B Trail & Sidewalks | 11/04/14 |

Scale: 1"=40'H, 1=5'V
Drawn By: RAS
Checked By: JMH

Sheet 15 of 26

SEI No. 13-157


Drawing: G:\2013 JOBS\13-157 Park Place Celina\Phase 1\13-157 storm 3.dwg Saved By: gdutton Save Time: 12/01/2014 9:31:35 AM
Plotted by: gdutton Plot Date: 1/25/2016 10:34 AM

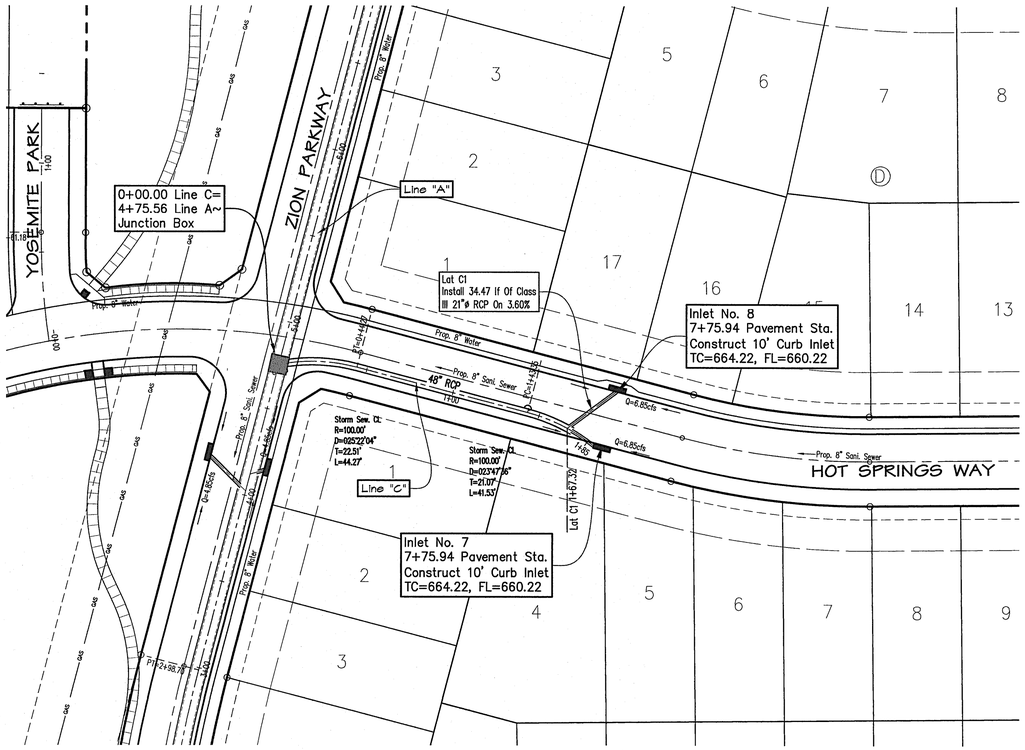

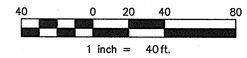


**Legend**

- * Barrier Free Ramp
- Flow Arrow
- Proposed Water
- Proposed Sanitary Sewer With Manhole
- Proposed Storm Sewer Manhole With Inlet
- 7 (C) Lot and Block Designation
- Utility Easement
- Building Setback Line

Note
See Sheets Det. 8-10
For Typical Storm Sewer
Details.

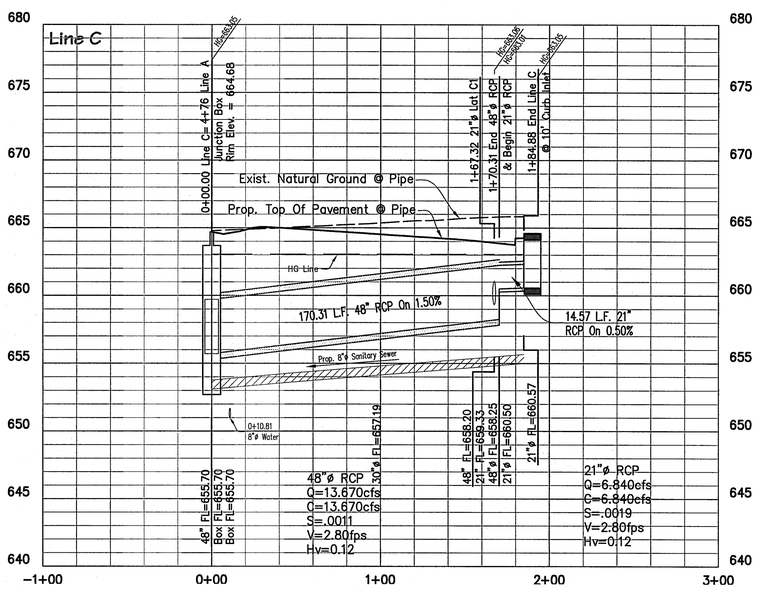


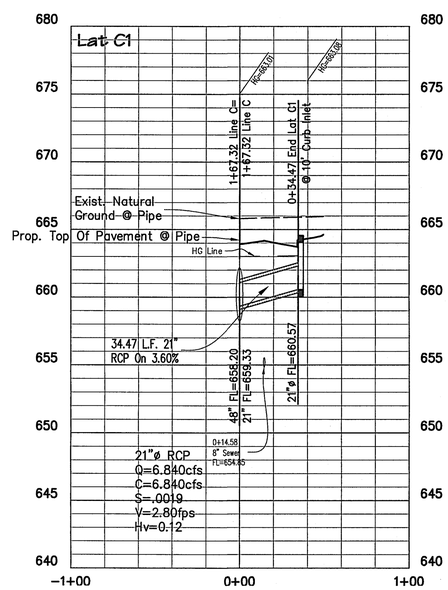


## AS-BUILT DRAWINGS

THIS DRAWING HAS BEEN REVISED TO CONFORM TO THE CONSTRUCTION RECORDS PROVIDED BY THE CONTRACTOR. ALIGNMENT AND GRADES SHOWN ON THIS DRAWING WERE NOT FIELD VERIFIED BY THE ENGINEER.

TIM C. SPIARS, P.E.

1/25/16

DATE

## CAUTION !!!
### EXISTING UTILITIES

EXISTING UTILITIES AND UNDERGROUND FACILITIES INDICATED ON THESE PLANS HAVE BEEN LOCATED FROM REFERENCE INFORMATION. IT SHALL BE THE RESPONSIBILITY OF THE CONTRACTOR TO VERIFY BOTH HORIZONTALLY AND VERTICALLY THE LOCATION OF ALL EXISTING UTILITIES AND UNDERGROUND FACILITIES PRIOR TO CONSTRUCTION, TO TAKE NECESSARY PRECAUTIONS IN ORDER TO PROTECT ALL FACILITIES ENCOUNTERED. THE CONTRACTOR SHALL PRESERVE AND PROTECT ALL EXISTING UTILITIES FROM DAMAGE DURING CONSTRUCTION.

CALL 1-800-344-8377 (DIG-TESS) OR OTHER UTILITY LOCATION SERVICES 48 HOURS PRIOR TO CONSTRUCTION ACTIVITY. SPIARS ENGINEERING, INC. IS NOT RESPONSIBLE FOR KNOWING ALL EXISTING UTILITIES OR DEPICTING EXACT LOCATIONS OF UTILITIES ON DRAWINGS.

Benchmark No. 1

Top of the south end of a headwall being 21 feet north of the southeast corner of the subject tract (said southeast corner being in the approximate center line of County Road 56). Elevation = 668.10

Benchmark No. 2

Being a pk nail found at the centerline intersection of Mellanie Ct and Tolleson Drive. Elevation = 668.00

P-201402-01


spiars ENGINEERING
765 Custer Road, Suite 100 • Plano, TX 75075 • (972) 422-0077 • TBPE No. F-2121


# PARKSIDE
CITY OF CELINA
COLLIN COUNTY, TEXAS
STORM SEWER PLAN & PROFILE

Issue Dates:

| Revisions | Date |
|---|---|
| Revised H&B Trail & Sidewalks | 10/14/14 |
| Revised H&B Trail & Sidewalks | 11/24/14 |

Scale: 1"=40'H, 1=5'V

Drawn By: RAS

Checked By: JMH

Sheet 16 of 26

SEI No. 13-157

Drawing: Q:\2013 JOBS\13-157 Park Place Celina\Phase 1\13-157 storm 4.dwg Saved By: Gbatton Saved Time: 11/7/2014 1:44:38 PM Plotted by: gbatton Plot Date: 1/25/2016 10:32 AM

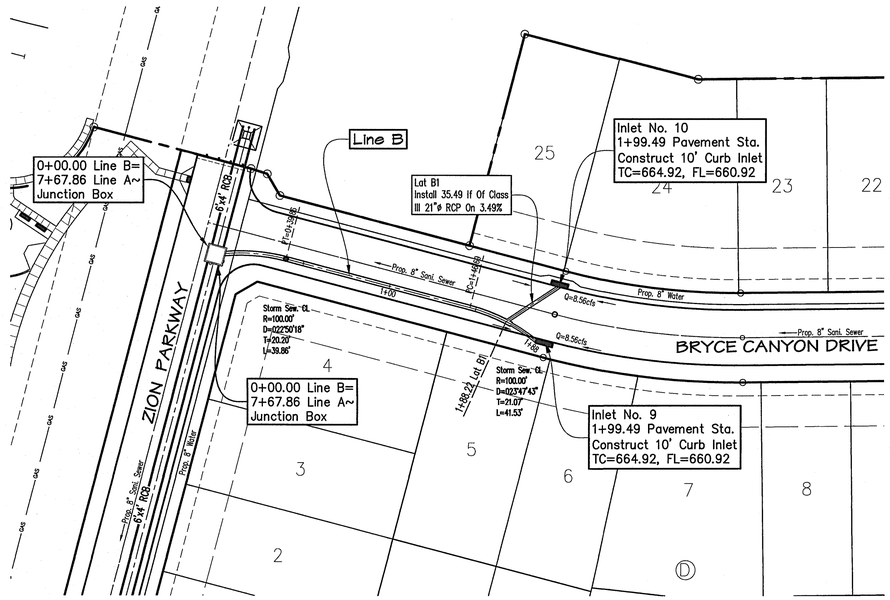


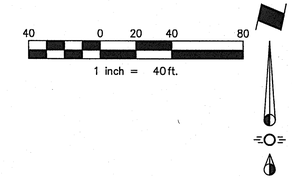


## Legend

- * Barrier Free Ramp
- Flow Arrow
- Proposed Water
- Proposed Sanitary Sewer With Manhole
- Proposed Storm Sewer Manhole With Inlet
- 7 (C) Lot and Block Designation
- Utility Easement
- Building Setback Line

Note
See Sheets Det. 8-10
For Typical Storm Sewer
Details.

## CAUTION !!!
### EXISTING UTILITIES

EXISTING UTILITIES AND UNDERGROUND FACILITIES INDICATED ON THESE PLANS HAVE BEEN LOCATED FROM REFERENCE INFORMATION. IT SHALL BE THE RESPONSIBILITY OF THE CONTRACTOR TO VERIFY BOTH HORIZONTALLY AND VERTICALLY THE LOCATION OF ALL EXISTING UTILITIES AND UNDERGROUND FACILITIES PRIOR TO CONSTRUCTION, TO TAKE NECESSARY PRECAUTIONS IN ORDER TO PROTECT ALL FACILITIES ENCOUNTERED. THE CONTRACTOR SHALL PRESERVE AND PROTECT ALL EXISTING UTILITIES FROM DAMAGE DURING CONSTRUCTION.

CALL 1-800-344-8377 (DIG-TESS) OR OTHER UTILITY LOCATION SERVICES 48 HOURS PRIOR TO CONSTRUCTION ACTIVITY. SPIARS ENGINEERING, INC. IS NOT RESPONSIBLE FOR KNOWING ALL EXISTING UTILITIES OR DEPICTING EXACT LOCATIONS OF UTILITIES ON DRAWINGS.

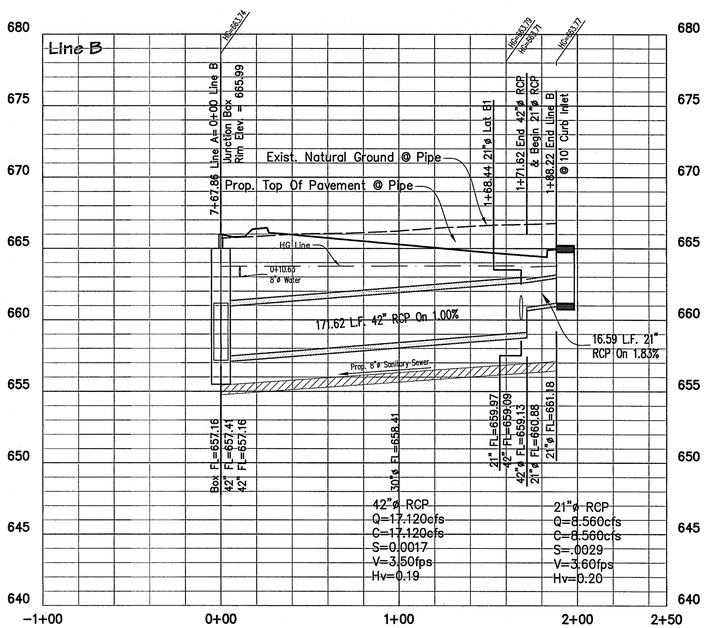


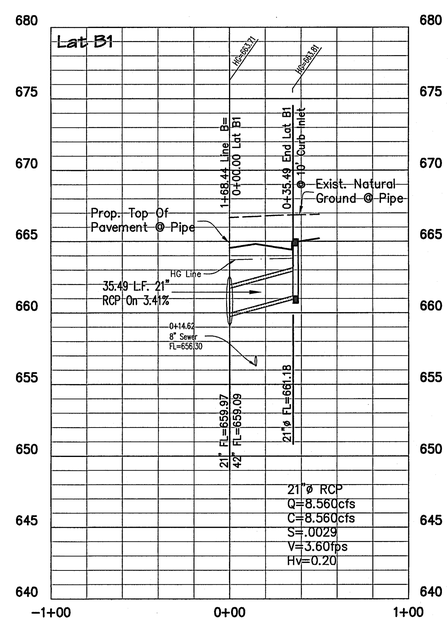


Benchmark No. 1

Top of the south end of a headwall being 21 feet north of the southeast corner of the subject tract (said southeast corner being in the approximate center line of County Road 56). Elevation = 668.10

Benchmark No. 2

Being a pk nail found at the centerline intersection of Mellanie Ct and Tolleson Drive. Elevation = 668.00

## AS-BUILT DRAWINGS

THIS DRAWING HAS BEEN REVISED TO CONFORM TO THE CONSTRUCTION RECORDS PROVIDED BY THE CONTRACTOR. ALIGNMENT AND GRADES SHOWN ON THIS DRAWING WERE NOT FIELD VERIFIED BY THE ENGINEER.

TIM C. SPIARS, P.E.

1/25/16

DATE

P-201402-01


spiars ENGINEERING
765 Custer Road, Suite 100 • Plano, TX 75075 • (972) 422-0077 • TBPE No. F-2121


STATE OF TEXAS
TIM C. SPIARS
REGISTERED PROFESSIONAL ENGINEER
1/25/16

# PARKSIDE
CITY OF CELINA
COLLIN COUNTY, TEXAS

## STORM SEWER PLAN & PROFILE

Issue Dates:

| Revisions | Date |
|---|---|
| Revised H&B Trail & Sidewalks | 10/14/14 |
| Revised H&B Trail & Sidewalks | 11/04/14 |

Scale: 1"=40'H, 1=5'V

Drawn By: RAS

Checked By: JMH

Sheet 17 of 26

SEI No. 13-157

Plotted by: gaston Plot Date: 1/25/2016 10:31 AM

Drawing: G:\2013_JOBS\13-157 Pres Ridge Celina\Phase 1\13-157 storm S-Seq Sized By: Gaston Save Time: 11/7/2014 1:58:42 PM

## Water Surface Elevation Analysis

| Elevation | Incremental Area ($ft^2$) | Average Area ($ft^2$) | Incremental Depth (ft) | Incremental Volume (ft3) | Cumulative Volume ($ft^3$) |
|---|---|---|---|---|---|
| 658.60 | 0 | | 0.00 | 0 | 0.00 |
| | | 2,890 | | | |
| 659.60 | 5,779 | | 1.00 | 61,333 | 61,333 |
| | | 6,088 | | | |
| 660.60 | 6,397 | | 1.00 | 56,940 | 118,273 |
| | | 6,705 | | | |
| 661.60 | 7,013 | | 1.00 | 52,647 | 170,920 |
| | | 3,507 | | | |

## Detention Pond Design ~ 100yr Frequency

**MODIFIED RATIONAL METHOD DETENTION BASIN DESIGN (100 YEAR)**
PROJECT: Parkside, Celina
April 4, 2014

Weighted Runoff Coefficient C = 0.52
Drainage Area - A = 85.86 acres
Time of Concentration - tc = 15.00 minutes
Maximum Outflow Rate - Q = 232.85 cfs

| Duration (minutes) | Intensity (inches/hr) | Inflow Discharge Q=CiA | Inflow Volume Cu. Ft. | Outflow Duration (minutes) | Outflow Volume Cu. Ft. | Storage Volume Cu. Ft. |
|---|---|---|---|---|---|---|
| 15 | 7.52 | 335.75 | 302,172 | 30 | 209,565 | 92,607 |
| 20 | 6.78 | 302.71 | 363,250 | 35 | 244,493 | 118,757 |
| 30 | 5.74 | 256.27 | 461,295 | 45 | 314,348 | 146,947 |
| 40 | 5.00 | 223.24 | 535,766 | 55 | 384,203 | 151,564 |
| 50 | 4.45 | 198.68 | 596,040 | 65 | 454,058 | 141,983 |
| 60 | 4.00 | 178.59 | 642,920 | 75 | 523,913 | 119,007 |
| 70 | 3.63 | 162.07 | 680,691 | 85 | 593,768 | 86,924 |
| 80 | 3.32 | 148.23 | 711,498 | 95 | 663,623 | 47,875 |
| 90 | 3.05 | 136.17 | 735,339 | 105 | 733,478 | 1,862 |
| | | | | Required Storage Volume | 151,564 | cubic feet |
| | | | | | 3.48 | acre-feet |

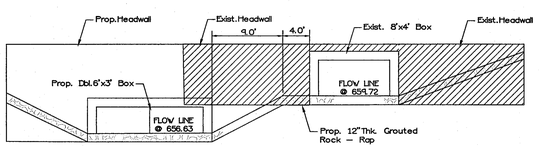


SECTION B –B

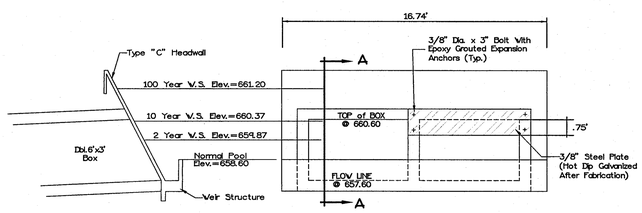


SECTION A–A FRONT VIEW

TYPE "C" HEADWALL W/ WEIR STRUCTURE

## CAUTION !!!
### EXISTING UTILITIES

EXISTING UTILITIES AND UNDERGROUND FACILITIES INDICATED ON THESE PLANS HAVE BEEN LOCATED FROM REFERENCE INFORMATION. IT SHALL BE THE RESPONSIBILITY OF THE CONTRACTOR TO VERIFY BOTH HORIZONTALLY AND VERTICALLY THE LOCATION OF ALL EXISTING UTILITIES AND UNDERGROUND FACILITIES PRIOR TO CONSTRUCTION, TO TAKE NECESSARY PRECAUTIONS IN ORDER TO PROTECT ALL FACILITIES ENCOUNTERED. THE CONTRACTOR SHALL PRESERVE AND PROTECT ALL EXISTING UTILITIES FROM DAMAGE DURING CONSTRUCTION.

CALL 1–800–344–8377 (DIG–TESS) OR OTHER UTILITY LOCATION SERVICES 48 HOURS PRIOR TO CONSTRUCTION ACTIVITY. SPIARS ENGINEERING, INC. IS NOT RESPONSIBLE FOR KNOWING ALL EXISTING UTILITIES OR DEPICTING EXACT LOCATIONS OF UTILITIES ON DRAWINGS.

## Allowable Release

**MODIFIED RATIONAL METHOD DETENTION BASIN DESIGN**
PROJECT: Tanner's Mill, Prosper
July 22, 2014

| Event | Intensity | Q Exist, cfs c= 0.4 A= 85.86 | Q Allowable cfs | Actual Release cfs |
|---|---|---|---|---|
| 100-Year | 6.78 | 232.85 | 232.85 | 232.85 |
| 10-Year | 4.95 | 170.00 | 170.00 | 170.00 |
| 2-Year | 3.65 | 103.33 | 103.33 | 103.33 |

## Detention Pond Design ~ 10yr Frequency

**MODIFIED RATIONAL METHOD DETENTION BASIN DESIGN (10 YEAR)**
PROJECT: Parkside, Celina
April 4, 2014

Weighted Runoff Coefficient C = 0.52
Drainage Area - A = 85.86 acres
Time of Concentration - tc = 15.00 minutes
Maximum Outflow Rate - Q = 170.00 cfs

| Duration (minutes) | Intensity (inches/hr) | Inflow Discharge Q=CiA | Inflow Volume Cu. Ft. | Outflow Duration (minutes) | Outflow Volume Cu. Ft. | Storage Volume Cu. Ft. |
|---|---|---|---|---|---|---|
| 15 | 5.52 | 246.45 | 221,807 | 30 | 153,000 | 68,807 |
| 20 | 4.95 | 221.00 | 265,204 | 35 | 178,500 | 86,704 |
| 30 | 4.10 | 183.05 | 329,496 | 45 | 229,500 | 99,996 |
| 40 | 3.55 | 158.50 | 380,394 | 55 | 280,500 | 99,894 |
| 50 | 3.10 | 138.41 | 415,219 | 65 | 331,500 | 83,719 |
| 60 | 2.75 | 122.78 | 442,007 | 75 | 382,500 | 59,507 |
| | | | | Required Storage Volume | 99,996 | cubic feet |
| | | | | | 2.30 | acre-feet |

## Detention Pond Design ~ 2yr Frequency

**MODIFIED RATIONAL METHOD DETENTION BASIN DESIGN (2 YEAR)**
PROJECT: Parkside, Celina
April 4, 2014

Weighted Runoff Coefficient C = 0.52
Drainage Area - A = 85.86 acres
Time of Concentration - tc = 15.00 minutes
Maximum Outflow Rate - Q = 125.36 cfs

| Duration (minutes) | Intensity (inches/hr) | Inflow Discharge Q=CiA | Inflow Volume Cu. Ft. | Outflow Duration (minutes) | Outflow Volume Cu. Ft. | Storage Volume Cu. Ft. |
|---|---|---|---|---|---|---|
| 15 | 4.15 | 185.29 | 166,757 | 30 | 112,824 | 53,933 |
| 20 | 3.65 | 162.96 | 195,555 | 35 | 131,628 | 63,927 |
| 30 | 2.98 | 133.05 | 239,488 | 45 | 169,236 | 70,252 |
| 40 | 2.55 | 113.85 | 273,241 | 55 | 206,844 | 66,397 |
| 50 | 2.20 | 98.22 | 294,672 | 65 | 244,452 | 50,220 |
| 60 | 1.95 | 87.06 | 313,423 | 75 | 282,060 | 31,363 |
| | | | | Required Storage Volume | 70,252 | cubic feet |
| | | | | | 1.61 | acre-feet |

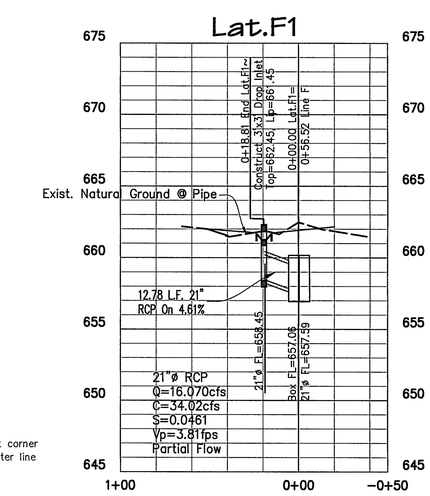


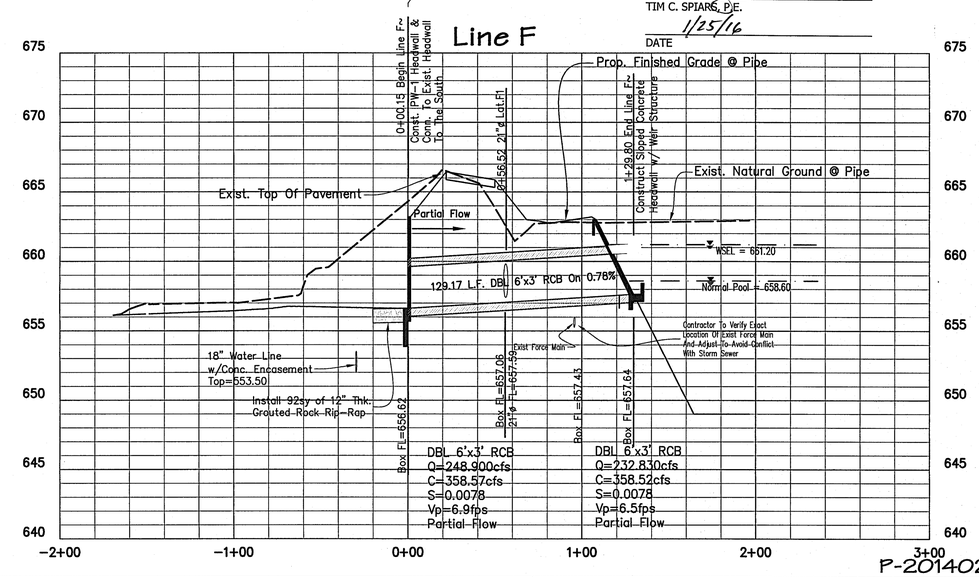


Benchmark No. 1

Top of the south end of a headwall being 21 feet north of the southeast corner of the subject tract (said southeast corner being in the approximate center line of County Road 56). Elevation = 668.10

Benchmark No. 2

Being a pk nail found at the centerline intersection of Mellanie Ct and Tolleson Drive. Elevation = 668.00

## Legend

- Barrier Free Ramp
- Flow Arrow
- Proposed Water
- Proposed Sanitary Sewer With Manhole
- Proposed Storm Sewer Manhole With Inlet
- 7 (C) Lot and Block Designation
- Utility Easement
- Building Setback Line

Note
See Sheets Det. 3-4 For Typical Storm Sewer Details.

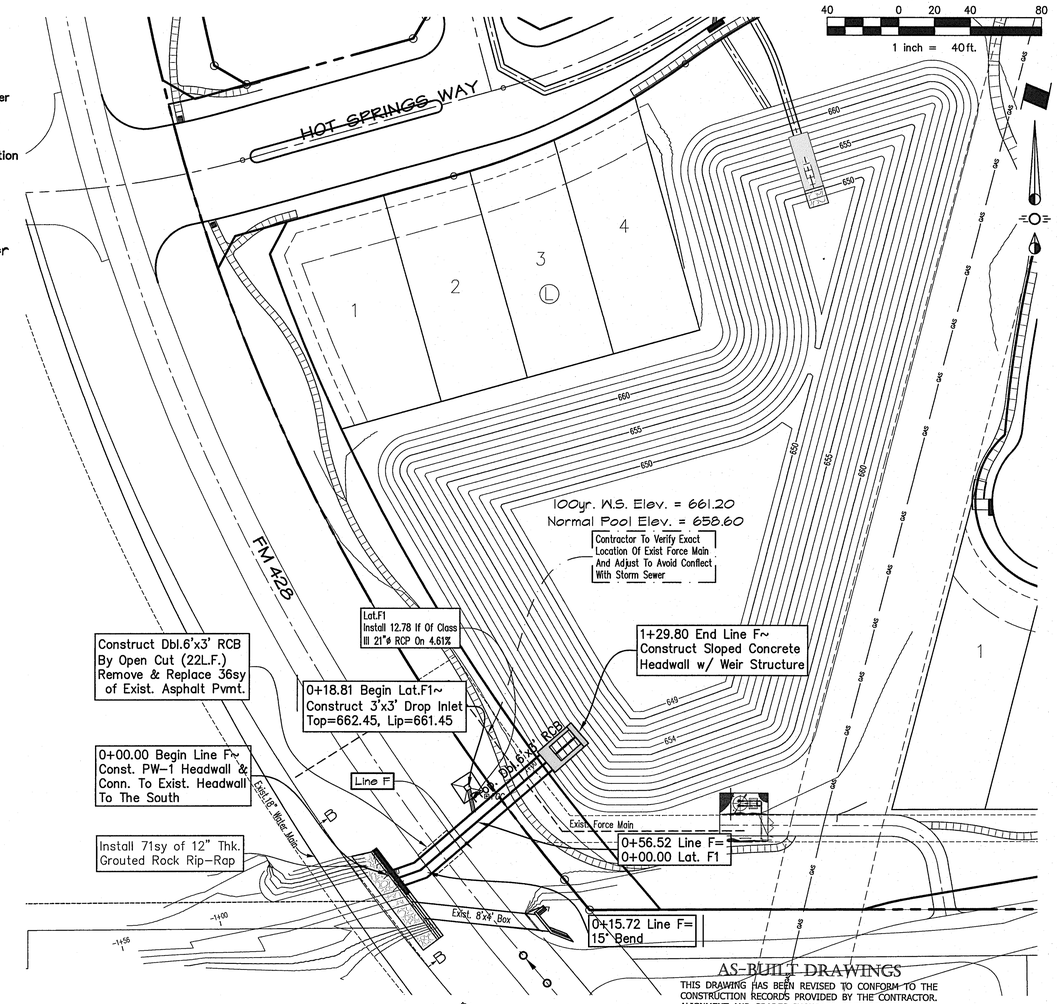


AS-BUILT DRAWINGS
THIS DRAWING HAS BEEN REVISED TO CONFORM TO THE CONSTRUCTION RECORDS PROVIDED BY THE CONTRACTOR. ALIGNMENT AND GRADES SHOWN ON THIS DRAWING WERE NOT FIELD VERIFIED BY THE ENGINEER.

TIM C. SPIARS, P.E.
1/25/16
DATE

P-201402-01


piars ENGINEERING
765 Custer Road, Suite 100 • Plano, TX 75075 • (972) 422-0077 • TBPE No. F-2121


STATE OF TEXAS
TIMOTHY C. SPIARS
CERTIFICATE NO. 87580
PROFESSIONAL ENGINEER
1/25/16

# PARKSIDE
CITY OF CELINA
COLLIN COUNTY, TEXAS
DETENTION PLAN

Issue Dates:

| Revisions | Date |
|---|---|
| Revised H&B Trail & Sidewalks | 10/14/14 |
| Revised H&B Trail & Sidewalks | 11/04/14 |

Scale: 1"=40'H, 1=5'V
Drawn By: RAS
Checked By: JMH
Sheet 18 of 26
SEI No. 13–157

Drawing: G:\2013 JOBS\13-157 Pace Prop Celina\Pace 13\13-157 det plan.dwg Saved By: Gaston Save Time: 12/18/2014 10:29:59 AM
Plotted by: gaston Plot Date: 1/25/2016 10:29 AM

Existing 18" Gas Line Crossing 8" Water Line

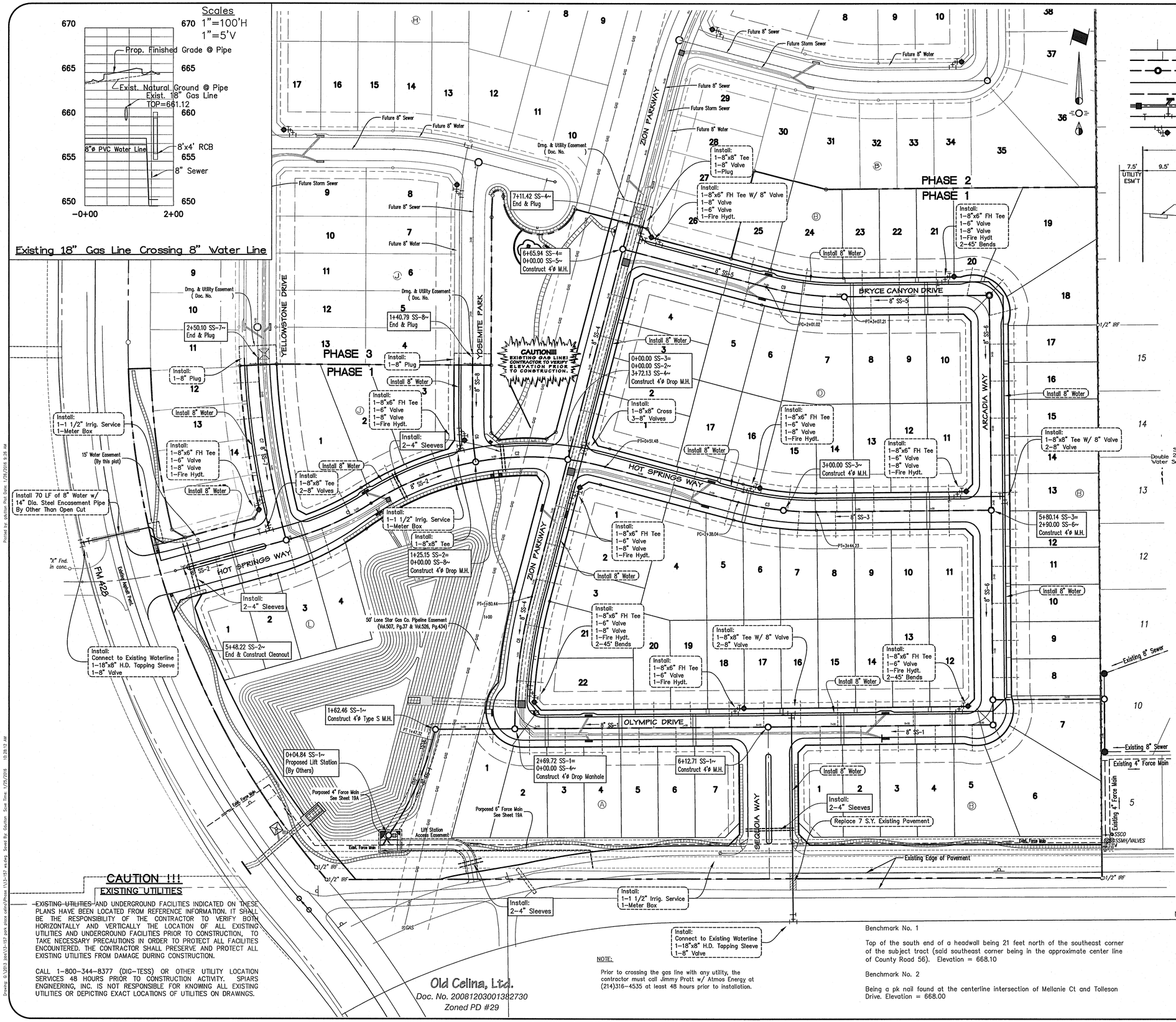


## Legend

1 inch = 60ft.

- ~ Prop. Water Service
- ~ Prop. Sewer Service
- ~ Prop. Sewer Manhole
- ~ Prop. Water Line
- ~ Prop. Sewer Line
- ~ Prop. Storm Sewer with Inlet
- ~ Prop. Water Valve and Tee
- ~ Prop. Fire Hydrant

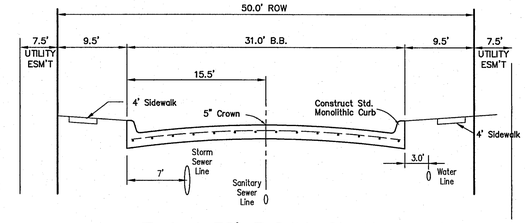


Typical 50' R.O.W. Section

Not To Scale

AS-BUILT DRAWINGS

THIS DRAWING HAS BEEN REVISED TO CONFORM TO THE CONSTRUCTION RECORDS PROVIDED BY THE CONTRACTOR. ALIGNMENT AND GRADES SHOWN ON THIS DRAWING WERE NOT FIELD VERIFIED BY THE ENGINEER.

TIM C. SPIARS, P.E.

1/25/16

DATE

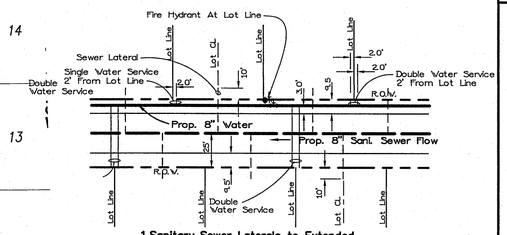


1. Sanitary Sewer Laterals to Extended 10' Past R.O.W.
2. Water Meters to be Placed Between Sidewalk and ROW
3. Water Services to be 1"

Typical Lot Service Detail

Sanitary Sewer Curve Table

| Curve # | Radius | Delta | Tangent | Length |
|---|---|---|---|---|
| C1 | 400.00' | 017°01'52" | 59.89' | 118.90' |
| C2 | 400.00' | 039°52'12" | 145.07' | 278.35' |
| C3 | 400.00' | 015°12'38" | 53.41' | 106.19' |
| C6 | 400.00' | 008°45'46" | 30.65' | 61.18' |
| C7 | 1050.00' | 015°53'52" | 146.61' | 291.34' |
| C8 | 700.00' | 014°46'08" | 90.72' | 180.44' |
| C9 | 400.00' | 015°12'38" | 53.41' | 106.19' |
| C10 | 400.00' | 020°24'35" | 72.01' | 142.49' |

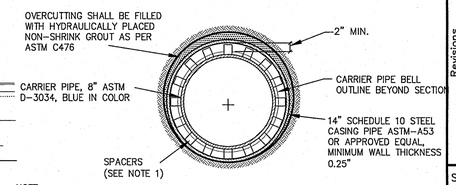


NOTE:

1. RACI SPACERS, OR APPROVED EQUAL, SHALL BE INSTALLED ON CARRIER PIPE PER MANUFACTURER'S RECOMMENDATIONS TO PREVENT SAGGING AND DAMAGE TO PIPE BELLS.
2. BORING SHALL BE BY THE DRY BORE METHOD AND ACCORDING TO N.C.T.C.O.G. 503.3.3.3.
3. ENDS OF THE CASING PIPE SHALL BE SEALED WITH 1/8" THICK NEOPRENE RUBBER & STAINLESS STEEL BANDS (SEE ATTACHED).

WATER MAIN ENCASEMENT & SPACER DETAIL

N.T.S.

P-201402-01

## CAUTION !!!
## EXISTING UTILITIES

EXISTING UTILITIES AND UNDERGROUND FACILITIES INDICATED ON THESE PLANS HAVE BEEN LOCATED FROM REFERENCE INFORMATION. IT SHALL BE THE RESPONSIBILITY OF THE CONTRACTOR TO VERIFY BOTH HORIZONTALLY AND VERTICALLY THE LOCATION OF ALL EXISTING UTILITIES AND UNDERGROUND FACILITIES PRIOR TO CONSTRUCTION, TO TAKE NECESSARY PRECAUTIONS IN ORDER TO PROTECT ALL FACILITIES ENCOUNTERED. THE CONTRACTOR SHALL PRESERVE AND PROTECT ALL EXISTING UTILITIES FROM DAMAGE DURING CONSTRUCTION.

CALL 1-800-344-8377 (DIG-TESS) OR OTHER UTILITY LOCATION SERVICES 48 HOURS PRIOR TO CONSTRUCTION ACTIVITY. SPIARS ENGINEERING, INC. IS NOT RESPONSIBLE FOR KNOWING ALL EXISTING UTILITIES OR DEPICTING EXACT LOCATIONS OF UTILITIES ON DRAWINGS.

NOTE:

Prior to crossing the gas line with any utility, the contractor must call Jimmy Pratt w/ Atmos Energy at (214)316-4535 at least 48 hours prior to installation.

Benchmark No. 1

Top of the south end of a headwall being 21 feet north of the southeast corner of the subject tract (said southeast corner being in the approximate center line of County Road 56). Elevation = 668.10

Benchmark No. 2

Being a pk nail found at the centerline intersection of Mellanie Ct and Tolleson Drive. Elevation = 668.00

Old Celina, Ltd.
Doc. No. 20081203001382730
Zoned PD #29


spiars ENGINEERING
765 Custer Road, Suite 100 • Plano, TX 75075 • (972) 422-0077 • TBPE No. F-2121


# PARKSIDE
CITY OF CELINA
COLLIN COUNTY, TEXAS
Water & Sewer Plan

Issue Dates:

| Revisions | Date |
|---|---|
| Revised H&B Trail & Sidewalks | 10/14/14 |
| Revised Prop. 8" Water Lables | 10/15/14 |
| Revised H&B Trail & Sidewalks | 11/04/14 |
| Added Irrig.Services & Meters Added Service for | |
| Lift Station, Revised Lift Station Wet Well | |
| Location & Revised Line SS-1 & Added Crossing | 12/04/14 |
| Sleeves | |

Scale: 1"=60'

Drawn By: RAS

Checked By: JMH

Sheet 19 of 26

SEI No. 13-157

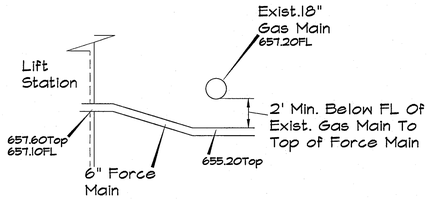


SECTION A-A

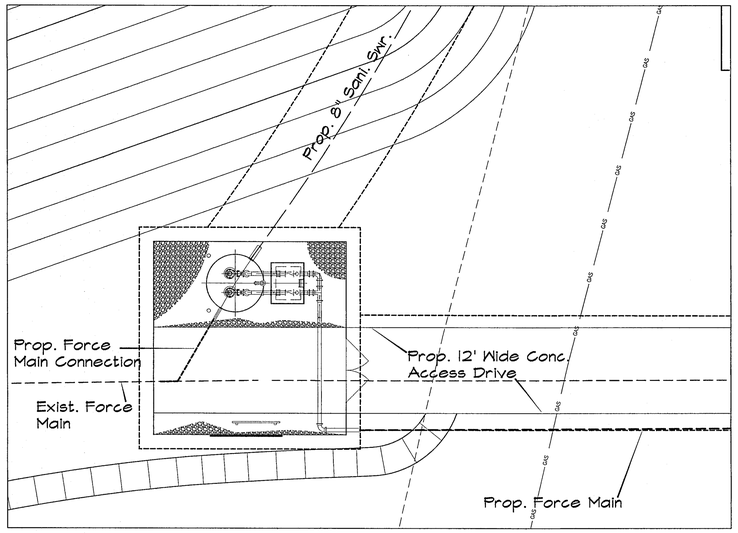


40 0 20 40 80
1 inch = 40 ft.

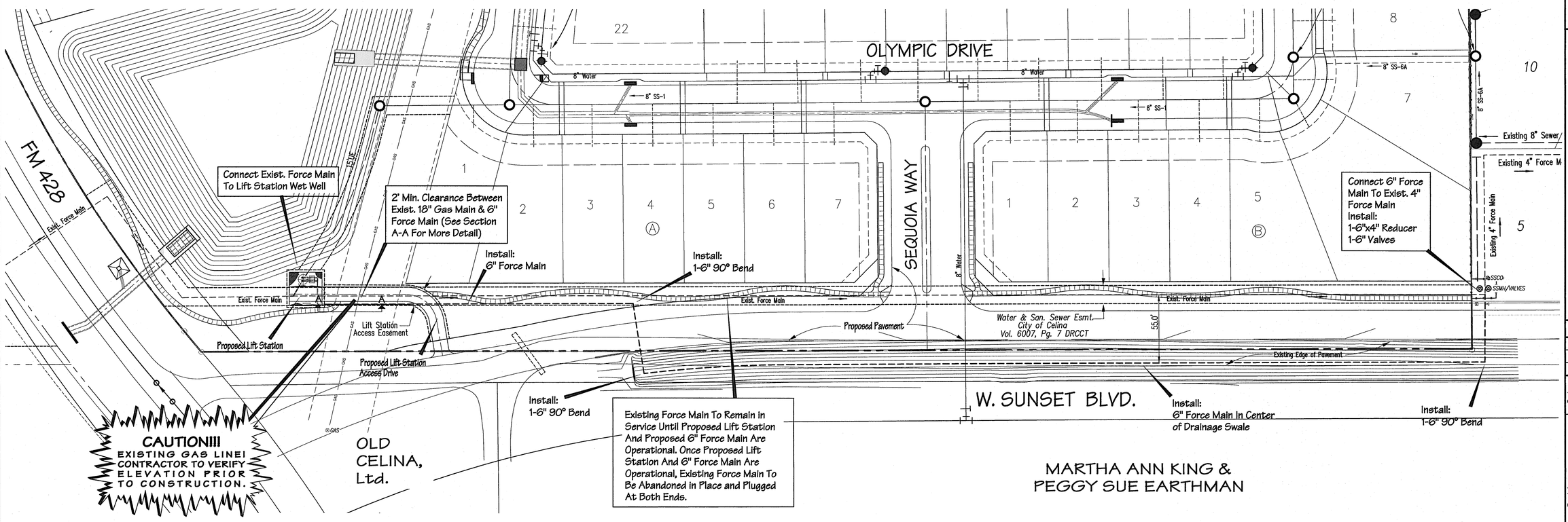


## CAUTION !!!
### EXISTING UTILITIES

EXISTING UTILITIES AND UNDERGROUND FACILITIES INDICATED ON THESE PLANS HAVE BEEN LOCATED FROM REFERENCE INFORMATION. IT SHALL BE THE RESPONSIBILITY OF THE CONTRACTOR TO VERIFY BOTH HORIZONTALLY AND VERTICALLY THE LOCATION OF ALL EXISTING UTILITIES AND UNDERGROUND FACILITIES PRIOR TO CONSTRUCTION, TO TAKE NECESSARY PRECAUTIONS IN ORDER TO PROTECT ALL FACILITIES ENCOUNTERED. THE CONTRACTOR SHALL PRESERVE AND PROTECT ALL EXISTING UTILITIES FROM DAMAGE DURING CONSTRUCTION.

CALL 1-800-344-8377 (DIG-TESS) OR OTHER UTILITY LOCATION SERVICES 48 HOURS PRIOR TO CONSTRUCTION ACTIVITY. SPIARS ENGINEERING, INC. IS NOT RESPONSIBLE FOR KNOWING ALL EXISTING UTILITIES OR DEPICTING EXACT LOCATIONS OF UTILITIES ON DRAWINGS.

NOTE:

Prior to crossing the gas line with any utility, the contractor must call Jimmy Pratt w/ Atmos Energy at (214)316-4535 at least 48 hours prior to installation.

Benchmark No. 1

Top of the south end of a headwall being 21 feet north of the southeast corner of the subject tract (said southeast corner being in the approximate center line of County Road 56). Elevation = 668.10

Benchmark No. 2

Being a pk nail found at the centerline intersection of Mellanie Ct and Tolleson Drive. Elevation = 668.00

AS-BUILT DRAWINGS

THIS DRAWING HAS BEEN REVISED TO CONFORM TO THE CONSTRUCTION RECORDS PROVIDED BY THE CONTRACTOR. ALIGNMENT AND GRADES SHOWN ON THIS DRAWING WERE NOT FIELD VERIFIED BY THE ENGINEER.

TIM C. SPIARS, P.E.

1/25/16
DATE

P-201402-01


spiars ENGINEERING
765 Custer Road, Suite 100 • Plano, TX 75075 • (972) 422-0077 • TBPE No. F-2121


STATE OF TEXAS
TIMOTHY C. SPIARS
LICENSED
PROFESSIONAL ENGINEER
1/25/16

# PARKSIDE
CITY OF CELINA
COLLIN COUNTY, TEXAS
6" FORCE MAIN PLAN

Issue Dates:

| Revisions | Date |
|---|---|
| Revised Force Main Connection | 11/19/14 |
| Revised Lift Station Site | 12/04/14 |

Scale: 1"=60'
Drawn By: RAS
Checked By: JMH
Sheet 19A of 26
SEI No. 13-157

Drawing: G:\2013 JOBS\13-157 Park Place Celina\Phase 1\13-157 PM.dwg Saved By: Gaston Saved Time: 2/2/2015 2:30:02 PM
Plotted by: gaston Plot Date: 1/25/2016 10:37 AM

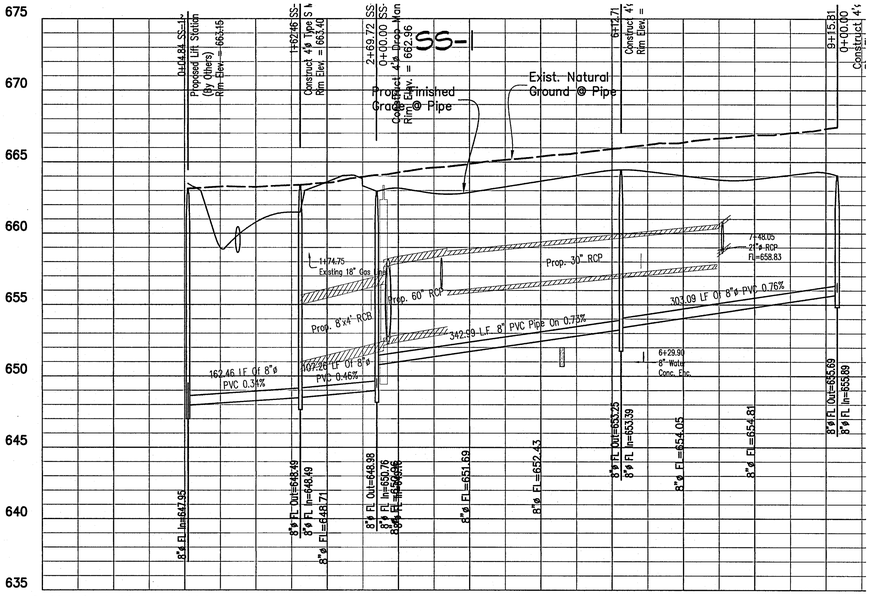


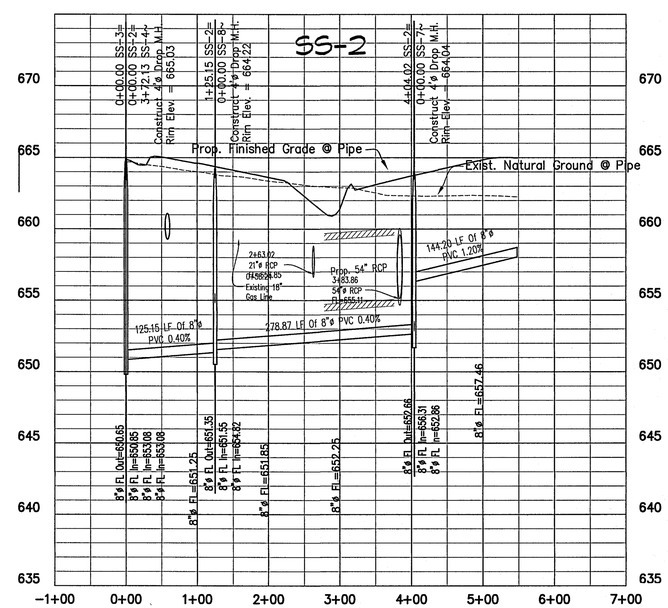


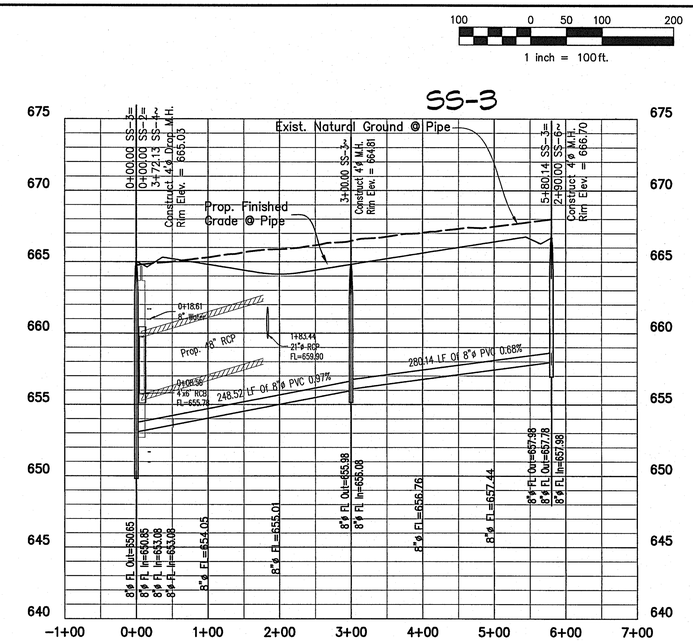


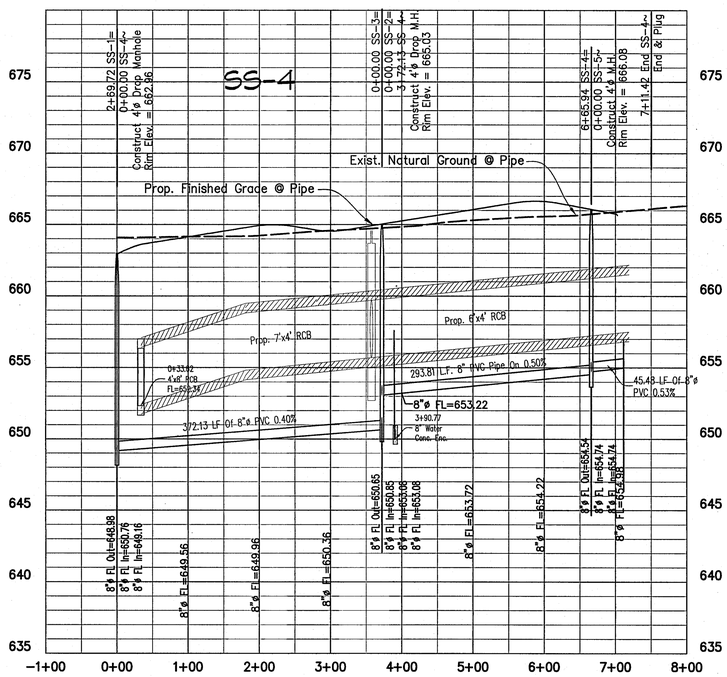


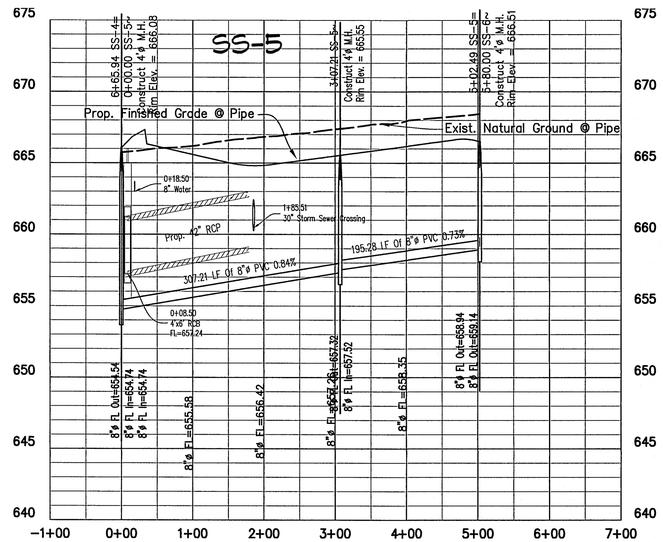


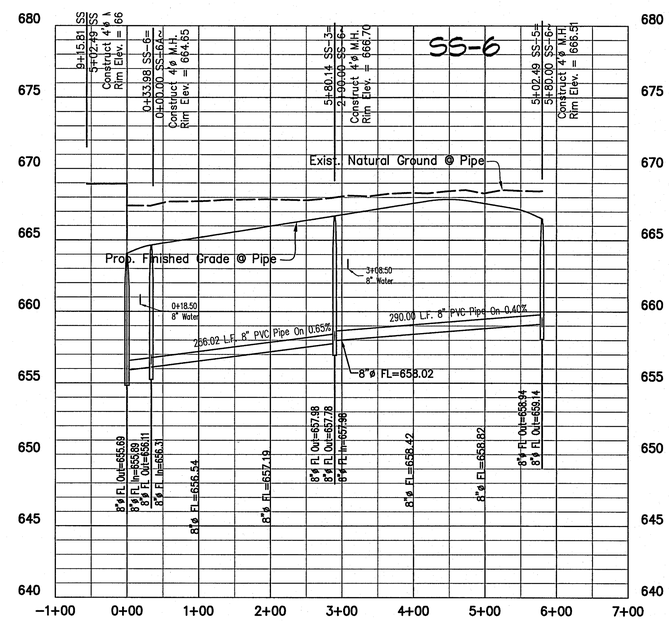


Benchmark No. 1

Top of the south end of a headwall being 21 feet north of the southeast corner of the subject tract (said southeast corner being in the approximate center line of County Road 56). Elevation = 668.10

Benchmark No. 2

Being a pk nail found at the centerline intersection of Mellanie Ct and Tolleson Drive. Elevation = 668.00

## AS-BUILT DRAWINGS

THIS DRAWING HAS BEEN REVISED TO CONFORM TO THE CONSTRUCTION RECORDS PROVIDED BY THE CONTRACTOR. ALIGNMENT AND GRADES SHOWN ON THIS DRAWING WERE NOT FIELD VERIFIED BY THE ENGINEER.

TIM C. SPIARS, P.E.

1/25/16

DATE

## CAUTION !!!

### EXISTING UTILITIES

EXISTING UTILITIES AND UNDERGROUND FACILITIES INDICATED ON THESE PLANS HAVE BEEN LOCATED FROM REFERENCE INFORMATION. IT SHALL BE THE RESPONSIBILITY OF THE CONTRACTOR TO VERIFY BOTH HORIZONTALLY AND VERTICALLY THE LOCATION OF ALL EXISTING UTILITIES AND UNDERGROUND FACILITIES PRIOR TO CONSTRUCTION, TO TAKE NECESSARY PRECAUTIONS IN ORDER TO PROTECT ALL FACILITIES ENCOUNTERED. THE CONTRACTOR SHALL PRESERVE AND PROTECT ALL EXISTING UTILITIES FROM DAMAGE DURING CONSTRUCTION.

CALL 1-800-344-8377 (DIG-TESS) OR OTHER UTILITY LOCATION SERVICES 48 HOURS PRIOR TO CONSTRUCTION ACTIVITY. SPIARS ENGINEERING, INC. IS NOT RESPONSIBLE FOR KNOWING ALL EXISTING UTILITIES OR DEPICTING EXACT LOCATIONS OF UTILITIES ON DRAWINGS.

P-201402-01


spiars ENGINEERING
765 Custer Road, Suite 100 • Plano, TX 75075 • (972) 422-0077 • TBPE No. F-2121


# PARKSIDE
CITY OF CELINA
COLLIN COUNTY, TEXAS

## Sanitary Sewer Profiles

Issue Dates:

| Revisions | Date |
|---|---|
| Revised Line SS-1 to match plan | 12/04/14 |

Scale: 1"=100'H, 1"=5'V

Drawn By: RAS

Checked By: JMH

Sheet 20 of 26

SEI No. 13-157

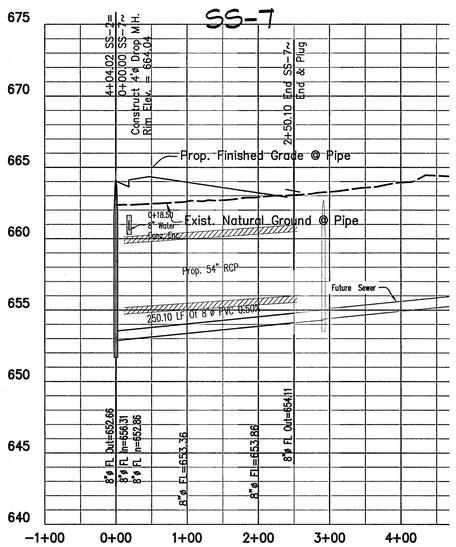


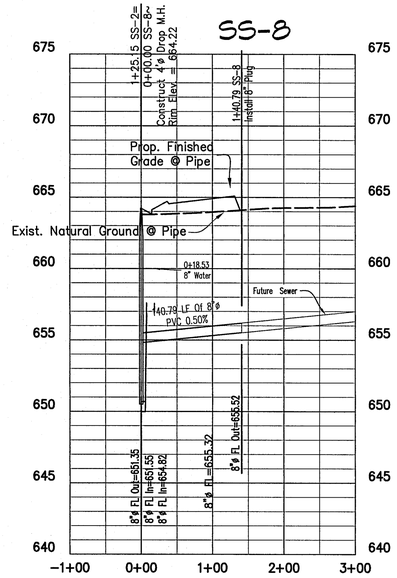


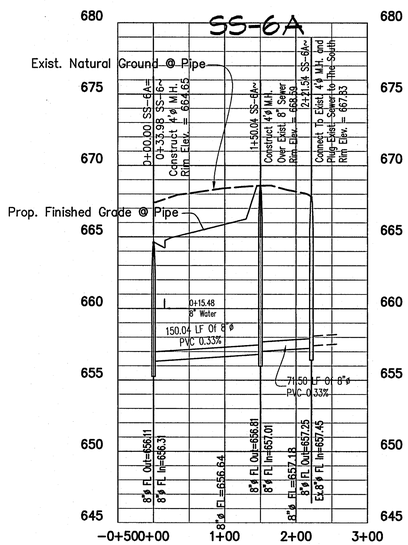


100 0 50 100 200

1 inch = 100 ft.

## AS-BUILT DRAWINGS

THIS DRAWING HAS BEEN REVISED TO CONFORM TO THE CONSTRUCTION RECORDS PROVIDED BY THE CONTRACTOR. ALIGNMENT AND GRADES SHOWN ON THIS DRAWING WERE NOT FIELD VERIFIED BY THE ENGINEER.

TIM C. SPIARS, P.E.

1/25/14
DATE

Benchmark No. 1

Top of the south end of a headwall being 21 feet north of the southeast corner of the subject tract (said southeast corner being in the approximate center line of County Road 56). Elevation = 668.10

Benchmark No. 2

Being a pk nail found at the centerline intersection of Mellanie Ct and Tolleson Drive. Elevation = 668.00

## CAUTION !!!

### EXISTING UTILITIES

EXISTING UTILITIES AND UNDERGROUND FACILITIES INDICATED ON THESE PLANS HAVE BEEN LOCATED FROM REFERENCE INFORMATION. IT SHALL BE THE RESPONSIBILITY OF THE CONTRACTOR TO VERIFY BOTH HORIZONTALLY AND VERTICALLY THE LOCATION OF ALL EXISTING UTILITIES AND UNDERGROUND FACILITIES PRIOR TO CONSTRUCTION, TO TAKE NECESSARY PRECAUTIONS IN ORDER TO PROTECT ALL FACILITIES ENCOUNTERED. THE CONTRACTOR SHALL PRESERVE AND PROTECT ALL EXISTING UTILITIES FROM DAMAGE DURING CONSTRUCTION.

CALL 1-800-344-8377 (DIG-TESS) OR OTHER UTILITY LOCATION SERVICES 48 HOURS PRIOR TO CONSTRUCTION ACTIVITY. SPIARS ENGINEERING, INC. IS NOT RESPONSIBLE FOR KNOWING ALL EXISTING UTILITIES OR DEPICTING EXACT LOCATIONS OF UTILITIES ON DRAWINGS.

P-201402-01


spiars ENGINEERING
765 Custer Road, Suite 100 • Plano, TX 75075 • (972) 422-0077 • TBPE No. F-2121


STATE OF TEXAS
TIMOTHY C. SPIARS
1/25/14

# PARKSIDE
CITY OF CELINA
COLLIN COUNTY, TEXAS
Sanitary Sewer Profiles

Issue Dates:

| Date | Revisions |
|---|---|
| | |

Scale: 1"=100'H, 1"=5'V
Drawn By: RAS
Checked By: JMH
Sheet 21 of 26
SEI No. 13-157


Drawing: G:\2013\13-157 Park Place Celina\Phase 1\13-157 ss.dwg Saved By: Edwin Save Time: 5/4/2015 9:48:31 AM
Plotted by: gabbie Plot Date: 1/25/2016 10:34 AM

## Legend

- ~ Phase 1 Silt Fence
- ~ Phase 2 Inlet Protection
- ~ Phase 3 Silt Fence
- ~ Curlex (Seeded) Or Ground Cover (8')
- ~ Limits of Construction

Note:
See Sheet 23 For Erosion Control Details
Total Disturbance Area=23 Acres

**Note: Silt Fence Shall Be Placed Around The Perimeter of All Stock Piled Material.**

## CAUTION !!!
### EXISTING UTILITIES

EXISTING UTILITIES AND UNDERGROUND FACILITIES INDICATED ON THESE PLANS HAVE BEEN LOCATED FROM REFERENCE INFORMATION. IT SHALL BE THE RESPONSIBILITY OF THE CONTRACTOR TO VERIFY BOTH HORIZONTALLY AND VERTICALLY THE LOCATION OF ALL EXISTING UTILITIES AND UNDERGROUND FACILITIES PRIOR TO CONSTRUCTION, TO TAKE NECESSARY PRECAUTIONS IN ORDER TO PROTECT ALL FACILITIES ENCOUNTERED. THE CONTRACTOR SHALL PRESERVE AND PROTECT ALL EXISTING UTILITIES FROM DAMAGE DURING CONSTRUCTION.

CALL 1-800-344-8377 (DIG-TESS) OR OTHER UTILITY LOCATION SERVICES 48 HOURS PRIOR TO CONSTRUCTION ACTIVITY. SPIARS ENGINEERING, INC. IS NOT RESPONSIBLE FOR KNOWING ALL EXISTING UTILITIES OR DEPICTING EXACT LOCATIONS OF UTILITIES ON DRAWINGS.

Benchmark No. 1

Top of the south end of a headwall being 21 feet north of the southeast corner of the subject tract (said southeast corner being in the approximate center line of County Road 56). Elevation = 668.10

Benchmark No. 2

Being a pk nail found at the centerline intersection of Mellanie Ct and Tolleson Drive. Elevation = 668.00

AS-BUILT DRAWINGS
THIS DRAWING HAS BEEN REVISED TO CONFORM TO THE CONSTRUCTION RECORDS PROVIDED BY THE CONTRACTOR. ALIGNMENT AND GRADES SHOWN ON THIS DRAWING WERE NOT FIELD VERIFIED BY THE ENGINEER.

TIM C. SPIARS, P.E.
1/25/16
DATE

P-201402-01


spiars ENGINEERING
765 Custer Road, Suite 100 • Plano, TX 75075 • (972) 422-0077 • TBPE No. F-2121


1/25/16

# PARKSIDE
CITY OF CELINA
COLLIN COUNTY, TEXAS
EROSION CONTROL PLAN

Issue Dates:

| Revisions | Date |
|---|---|
| Revised H&B Trail & Sidewalks | 10/14/14 |
| Revised H&B Trail & Sidewalks | 11/04/14 |

Scale: 1"=50'
Drawn By: RAS
Checked By: JMH

Sheet 22 of 26

SEI No. 13-157

Plotted by: gaston Red Date: 1/25/2016 10:22 AM
Drawing: G:\2013_0813\13-157 Park Place Celina\Phase 1\13-157 ec.dwg Saved By: RShively Save Time: 11/14/2014 7:24:37 AM

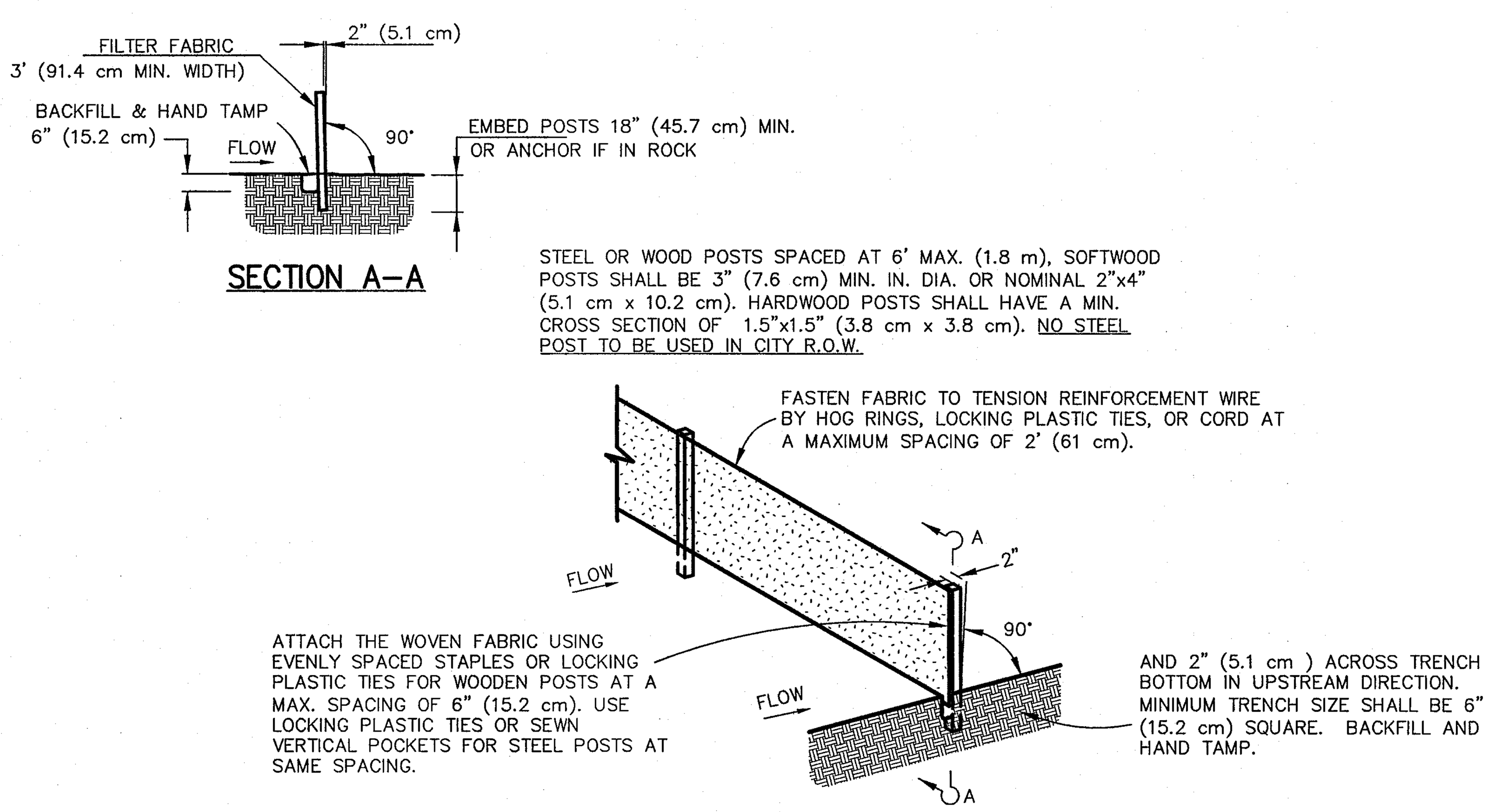


## SILT FENCE DETAIL

Not to Scale

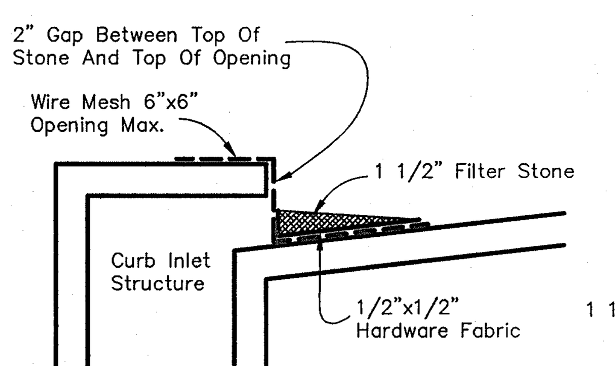


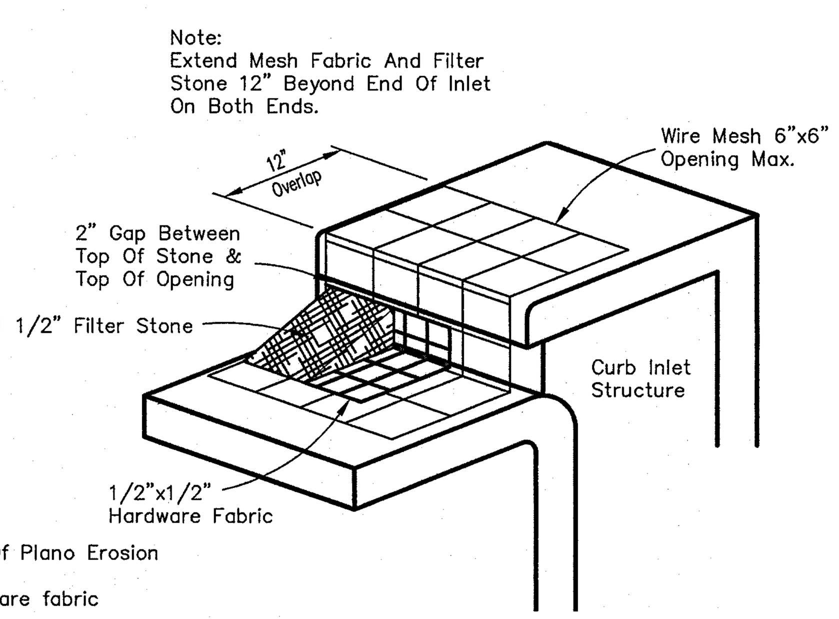


1. Curb Inlet Protection 5.10, As Per City Of Plano Erosion And Sediment Control Manual Dated 1997.
2. Wire Fabric – Standard galvanized hardware fabric with 1/2" by 1/2" openings.
3. Filter Stone – NCTCOG Specification 2.1.8.(e)
4. Wire Mesh – welded wire fabric conforming to NCTCOG Specifiaction 2.2.7 maximum opening 6"x6".

## TYPE A CURB INLET PROTECTION

Not to Scale

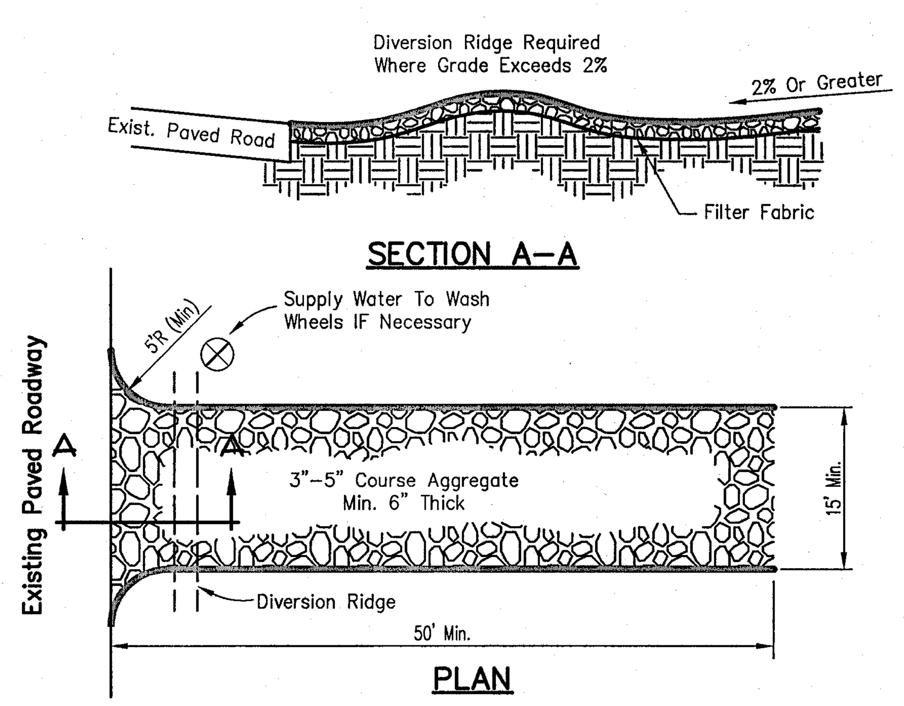


## TEMPORARY STONE CONSTRUCTION ENTRANCE / EXIT

Not to Scale

## CONSTRUCTION NOTES – SILT FENCE

1. Posts which support the silt fence shall be installed on a slight angle toward the anticipated runoff source. The post must be embedded a minimum of 18 inches.

2. The toe of the silt fence shall be trenched in with a spade or mechanical trencher, so that the downslope face of the trench is flat and perpendicular to the line of flow. Where fence cannot be trenched in (e.g. pavement), weight fabric flap with washed gravel on the uphill side to prevent flow under fence.

3. The trench must be a minimum of 6 inches deep and 6 inches wide to allow for the silt fence fabric to be laid in the ground and backfilled with compacted material.

4. Silt fence shall be securely fastened to each support post or to woven wire, which is in turn attached to the support post. There shall be a 6 inch double overlap, securely fastened where ends of fabric meet.

5. Inspection shall be made weekly or after each rainfall. Repair or replacement shall be made promptly as needed.

6. Silt fence shall be removed when the site is completely stabilized so as not to block or impede storm flow or drainage.

7. Accumulated silt shall be removed when it reached a depth of 6 inches. The silt shall be disposed of at an approved site and in such a manner as to not contribute to additional siltation.

8. No steel posts are to be installed in the city R.O.W.

### CONSTRUCTION NOTES:

1. Silt fences shall be installed as shown per detail.
2. Contractor will install additional erosion control where erosion protection is needed as per the owners engineers, or the City inspector.
3. The existing vegetation along existing parkways and medians shall be replaced to its original condition or better.
4. All drainage swales shall be grassed as per City Standards, prior to the City acceptance of project.
5. All construction erosion control shall meet City Ordinance.
6. Erosion construction shall be completed in the following PHASES:

PHASE 1 (Prior To Start Of Rough Grading)

1. Silt fence shall be placed as shown per detail.

PHASE 2 (After utility construction & prior to paving const.)

1. Inlet protection shall be placed at all inlets per detail to prevent erosion material from entering storm sewer system.

PHASE 3 (After paving construction)

1. Silt fence shall be placed as shown per detail.
2. All parkways and disturbed area in street R.O.W. to be seeded with grass as per city standards.
3. Vegetation to be established in all offsite disturbed areas.
4. Contractor shall police the site regularly and keep site free of trash and construction debris. Contractor is required to repair and/or replace damaged erosion control devices.

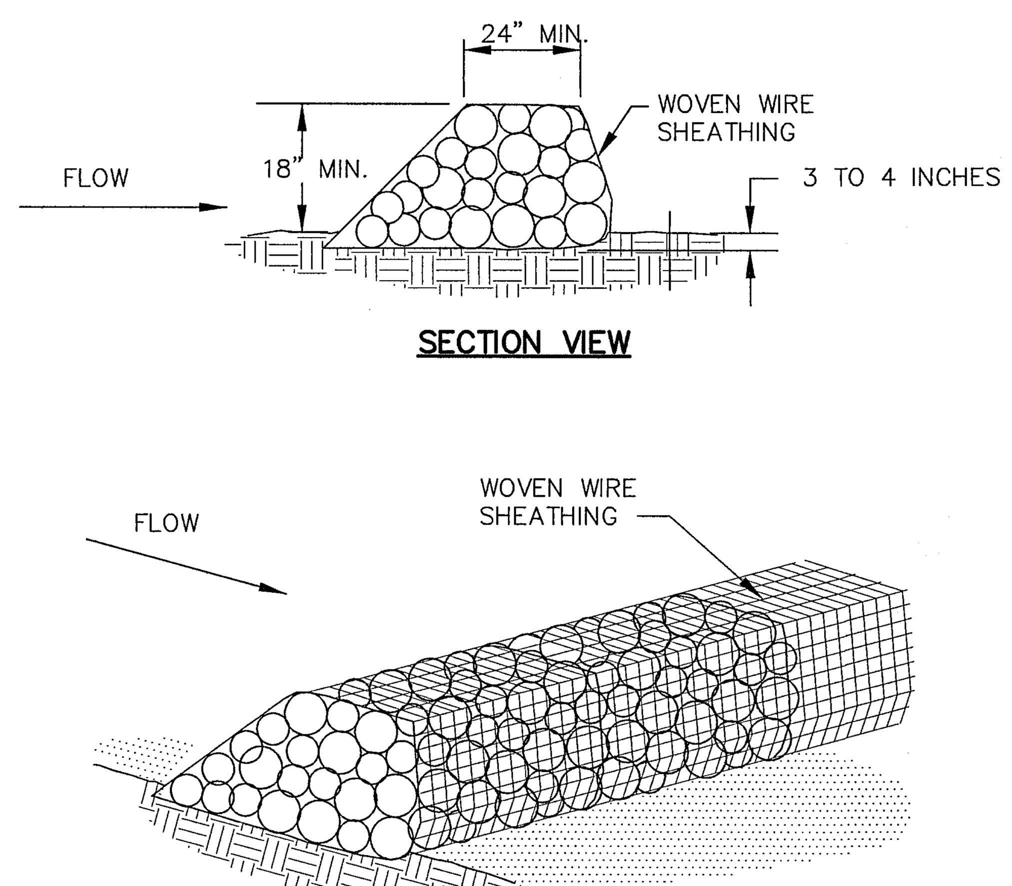


## ROCK CHECK DAM

Not to Scale

## STORM WATER POLLUTION PREVENTION GENERAL NOTES

1. All operators and/or contractors shall conform to the terms and conditions of the National Pollution Discharge Elimination Systems (NPDES) General Permit as published in the Federal Register, Vol. 57, No. 175, September 9, 1992, by the Environmental Protection Agency (EPA).
2. The Notice of Intent (NOI), as required by the General Permit, must be properly displayed on site at all times by each operator.
3. All releases of reportable quantities of hazardous substances shall be reported immediately to the facility operator and EPA.
4. Qualified operator personnel must inspect the site at least once every fourteen days and within 24 hours of a 1/2 – inch or greater rainfall event. The inspector shall document the results.
5. Modifications to the Storm Water Pollution Prevention Plan shall be implemented and be in-place within a seven calendar day period.
6. If any contractor sees a violation by an operator or another contractor, he shall notify the operator and contractor in violation, as well as the facility operator.
7. Erosion control shall be installed prior to any grading.
8. Accumulated silt deposits shall be removed from silt fences and hay bale dikes when silt depth reaches six inches. Removal of silt deposits by the contractor shall be incidental to the performance of the contract and a separate bid item shall not be included.
9. The contractor shall add or delete erosion protection at the request and direction of the Operator or the City.
10. After installation of pavement, final lot benching and general cleanup, the Paving Contractor shall establish grass groundcover in all street parkways, lots and all other disturbed areas. Materials shall be as specified in Item 2.15 and seeding shall be in accordance with Item 3.10 of the NCTCOG Standard Specifications.
11. It shall be the contractor's responsibility to control and limit silt and sediment leaving the site. Specifically, the contractor shall protect all public streets, alleys, streams and storm drainage systems from erosion deposits.
12 It shall be the contractor's responsibility to provide a dumpster (or equal) to collect solid waste materials during construction.
13. The attached Drainage Area Map, as prepared by Spiars Engineering, Inc., specifically for this project, shall be made part of the Storm Water Pollution Prevention Plan.
14. It is anticipated that the following non-storm water discharges will be associated with this project. These discharges are authorized through the construction general permit:
    - A. Fire hydrant flushings
    - B. Water used to wash vehicles and to control dust
    - C. Potable water sources including waterline flushings
    - D. Irrigation drainage
    - E. Pavement washdown
    - F. Uncontaminated ground water
    - G. Construction water
15. Construction waste disposal containers shall be provided on the site for disposal of all non-hazardous construction waste materials. The containers shall be hauled to landfill by the Contractor.
16. All hazardous materials shall be handled and disposed of by the Contractor in accordance with Federal, State and Local regulations.

| BMP MAINTENANCE SCHEDULE | | |
|---|---|---|
| BMP | MAINTENANCE FREQUENCY | BY: |
| TEMPORARY CONSTRUCTION ENTRANCE / EXIT | WEEKLY AND AFTER RAIN STORM EVENTS | OWNER |
| ROCK CHECK DAM | WEEKLY AND AFTER RAIN STORM EVENTS | OWNER |
| SILT FENCE | WEEKLY AND AFTER RAIN STORM EVENTS | OWNER |
| INLET PROTECTION | WEEKLY AND AFTER RAIN STORM EVENTS | OWNER |

## STORM WATER POLLUTION PREVENTION BMP MAINTENANCE SCHEDULE

STABILIZATION PRACTICES

DISTURBED AREAS ON WHICH CONSTRUCTION ACTIVITY HAS CEASED (TEMPORARILY OR PERMANENTLY) SHALL BE STABILIZED WITHIN 14 DAYS UNLESS ACTIVITIES ARE SCHEDULED TO RESUME WITHIN 21 DAYS. PERMANENT STABILIZATION SHALL BE SEED OR SOD

STRUCTURAL PRACTICES

SILT FENCE
INLET PROTECTION
STABILIZED CONSTRUCTION ENTRY

OTHER ADDITIONAL STORM WATER MANAGEMENT FEATURES

PERMANENT CURB & GUTTER, STORM SEWER INLETS & STORM SEWER

OTHER BEST MANAGEMENT (HOUSEKEEPING) PRACTICES

THE FOLLOWING INDICATED PRACTICES SHALL BE FOLLOWED:

LIME STABILIZATION
per BMP S-11 FROM NCTCOG CONSTRUCTION BMP MANUAL

SOLID WASTE MANAGEMENT
per BMP W-1 FROM NCTCOG CONSTRUCTION BMP MANUAL

HAZARDOUS WASTE MANAGEMENT
per BMP W-2 FROM NCTCOG CONSTRUCTION BMP MANUAL

CONCRETE WASTE MANAGEMENT
per BMP W-3 FROM NCTCOG CONSTRUCTION BMP MANUAL

SANDBLASTING WASTE MANAGEMENT
per BMP W-4 FROM NCTCOG CONSTRUCTION BMP MANUAL

DUST REDUCTION MEASURES
EXCESS DIRT ON ADJACENT ROADS REMOVED DAILY

### AS-BUILT DRAWINGS

THIS DRAWING HAS BEEN REVISED TO CONFORM TO THE CONSTRUCTION RECORDS PROVIDED BY THE CONTRACTOR. ALIGNMENT AND GRADES SHOWN ON THIS DRAWING WERE NOT FIELD VERIFIED BY THE ENGINEER.

TIM C. SPIARS, P.E.

1/25/16
DATE

Benchmark No. 1

Top of the south end of a headwall being 21 feet north of the southeast corner of the subject tract (said southeast corner being in the approximate center line of County Road 56). Elevation = 668.10

Benchmark No. 2

Being a pk nail found at the centerline intersection of Mellanie Ct and Tolleson Drive. Elevation = 668.00

### CAUTION !!!
EXISTING UTILITIES

EXISTING UTILITIES AND UNDERGROUND FACILITIES INDICATED ON THESE PLANS HAVE BEEN LOCATED FROM REFERENCE INFORMATION. IT SHALL BE THE RESPONSIBILITY OF THE CONTRACTOR TO VERIFY BOTH HORIZONTALLY AND VERTICALLY THE LOCATION OF ALL EXISTING UTILITIES AND UNDERGROUND FACILITIES PRIOR TO CONSTRUCTION, TO TAKE NECESSARY PRECAUTIONS IN ORDER TO PROTECT ALL FACILITIES ENCOUNTERED. THE CONTRACTOR SHALL PRESERVE AND PROTECT ALL EXISTING UTILITIES FROM DAMAGE DURING CONSTRUCTION.

CALL 1-800-344-8377 (DIG-TESS) OR OTHER UTILITY LOCATION SERVICES 48 HOURS PRIOR TO CONSTRUCTION ACTIVITY. SPIARS ENGINEERING, INC. IS NOT RESPONSIBLE FOR KNOWING ALL EXISTING UTILITIES OR DEPICTING EXACT LOCATIONS OF UTILITIES ON DRAWINGS.

P-201402-01

spiars ENGINEERING
765 Custer Road, Suite 100 • Plano, TX 75075 • (972) 422-0077 • TBPE No. F-2121

STATE OF TEXAS
TIM C. SPIARS
84017
LICENSED PROFESSIONAL ENGINEER
1/25/16

# PARKSIDE
CITY OF CELINA
COLLIN COUNTY, TEXAS

EROSION CONTROL DETAILS

Issue Dates:

Date

Revisions

Scale: As Noted
Drawn By: RAS
Checked By: JMH

Sheet 23 of 26

SEI No. 13-157

Drawing: G:\2013 JOBS\13-157 Park Place Celina\Phase 1\13-157 ec.dwg Saved By: RShively Save Time: 11/14/2014 7:24:37 AM Plotted by: gdutton Plot Date: 1/25/2016 10:22 AM

Benchmark No. 1

Top of the south end of a headwall being 21 feet north of the southeast corner of the subject tract (said southeast corner being in the approximate center line of County Road 56). Elevation = 668.10

Benchmark No. 2

Being a pk nail found at the centerline intersection of Mellanie Ct and Tolleson Drive. Elevation = 668.00

## Legend

| | |
|---|---|
| FP=700.00 | ~ Prop. Finished Pad Elev. |
| 700.0TC | ~ Prop. Top Of Curb Elevation |
| 700.0TW | ~ Prop. Top of Wall Elevation |
| 700.0BW | ~ Prop. Bottom of Wall Elevation |
| 700.0F | ~ Prop. Finished Grade |
| | ~ Direction Of Flow |
| | ~ Proposed Private Wall Locations (To Be Maintained By Lot Owner Unless Otherwise Noted.) |
| 700 | ~ Exist. Contours |
| 700 | ~ Prop. Contours |

## CAUTION !!!
### EXISTING UTILITIES

EXISTING UTILITIES AND UNDERGROUND FACILITIES INDICATED ON THESE PLANS HAVE BEEN LOCATED FROM REFERENCE INFORMATION. IT SHALL BE THE RESPONSIBILITY OF THE CONTRACTOR TO VERIFY BOTH HORIZONTALLY AND VERTICALLY THE LOCATION OF ALL EXISTING UTILITIES AND UNDERGROUND FACILITIES PRIOR TO CONSTRUCTION, TO TAKE NECESSARY PRECAUTIONS IN ORDER TO PROTECT ALL FACILITIES ENCOUNTERED. THE CONTRACTOR SHALL PRESERVE AND PROTECT ALL EXISTING UTILITIES FROM DAMAGE DURING CONSTRUCTION.

CALL 1-800-344-8377 (DIG-TESS) OR OTHER UTILITY LOCATION SERVICES 48 HOURS PRIOR TO CONSTRUCTION ACTIVITY. SPIARS ENGINEERING, INC. IS NOT RESPONSIBLE FOR KNOWING ALL EXISTING UTILITIES OR DEPICTING EXACT LOCATIONS OF UTILITIES ON DRAWINGS.

## AS-BUILT DRAWINGS

THIS DRAWING HAS BEEN REVISED TO CONFORM TO THE CONSTRUCTION RECORDS PROVIDED BY THE CONTRACTOR. ALIGNMENT AND GRADES SHOWN ON THIS DRAWING WERE NOT FIELD VERIFIED BY THE ENGINEER.

TIM C. SPIARS, P.E.

1/25/16

DATE

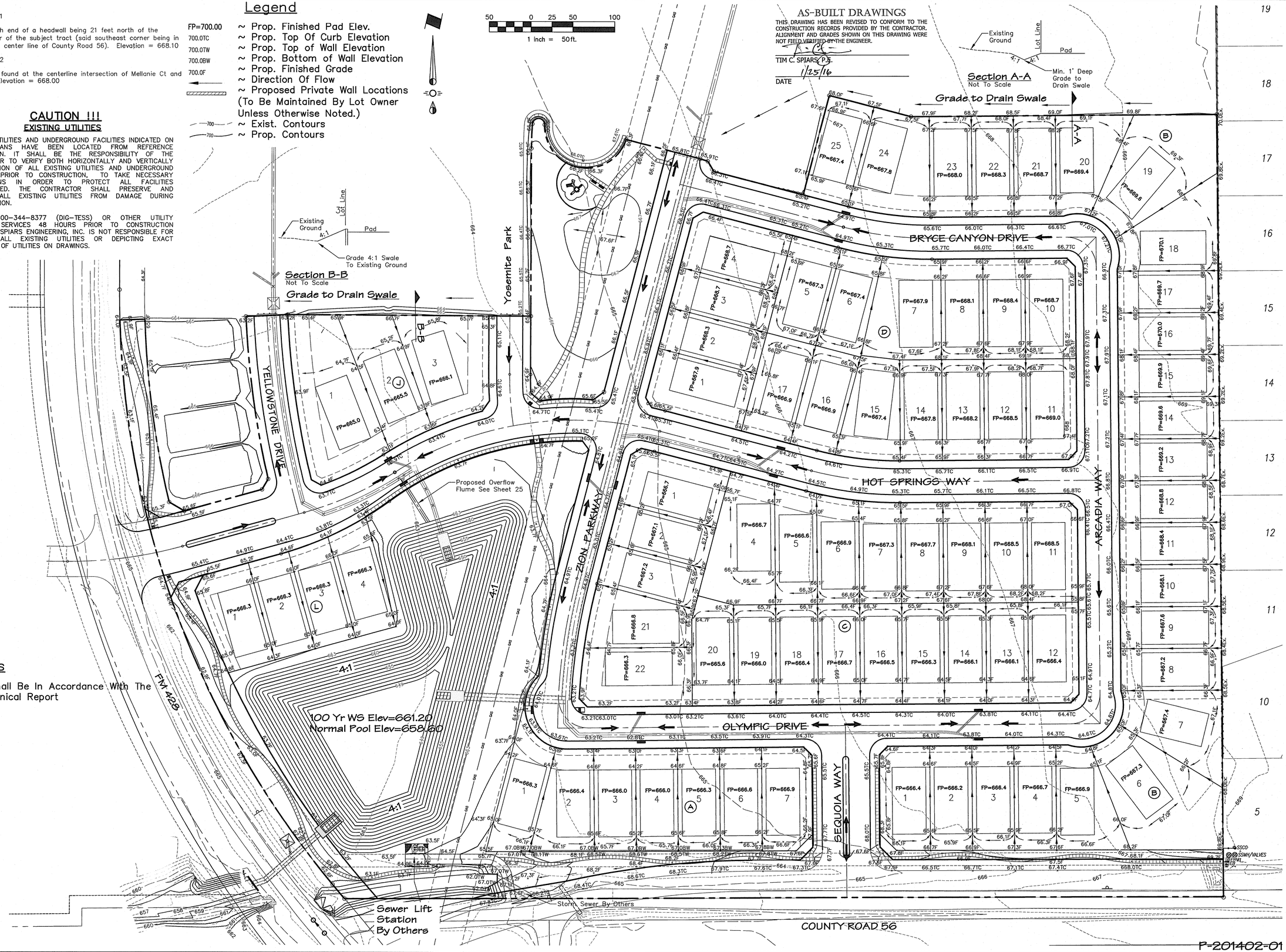


## Notes

Work Shall Be In Accordance With The Geotechnical Report

P-201402-01


spiars ENGINEERING
765 Custer Road, Suite 100 • Plano, TX 75075 • (972) 422-0077 • TBPE No. F-2121


# PARKSIDE
## CITY OF CELINA
## COLLIN COUNTY, TEXAS
## LOT GRADING PLAN

Issue Dates:

| Revisions | Date |
|---|---|
| Revised H&B Trail & Sidewalks | 10/14/14 |
| Revised Grades at rear of lots along C.R. 56 | 10/14/14 |
| Revised Sidewalks, Hike & Bike Trails | 11/04/14 |
| Revised Grading & Added Wall Lots 1-7 Blk A | 10/06/15 |

Scale: 1"=50'

Drawn By: RAS

Checked By: JMH

Sheet 24 of 26

SEI No. 13-157

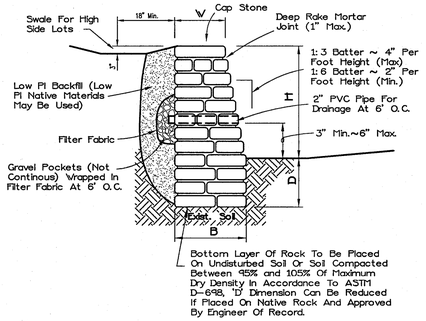


STONE RETAINING WALL

| Wall Height ~ H | B | D | W |
|---|---|---|---|
| 0.0' To 2.0' | 18" | 12" Min. | 12" Min. |
| 2.0' To 4.0' | H/2(18" Min) | 12" Min. | 12" Min. |
| 4.0' To 5.0' | H/2 | 18" Min. | 12" Min. |
| 5.0' To 6.0' | H/2 | 24" Min. | 12" Min. |
| 6.0' To 7.0' | H/2 | 30" Min. | 12" Min. |
| 7.0' To 8.0' | H/2 | 36" Min. | 12" Min. |

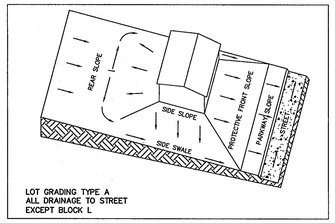


LOT GRADING TYPE A
ALL DRAINAGE TO STREET
EXCEPT BLOCK L

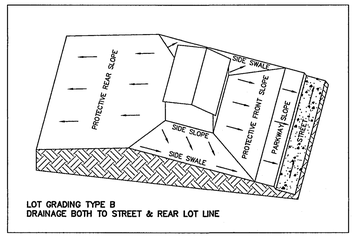


LOT GRADING TYPE B
DRAINAGE BOTH TO STREET & REAR LOT LINE

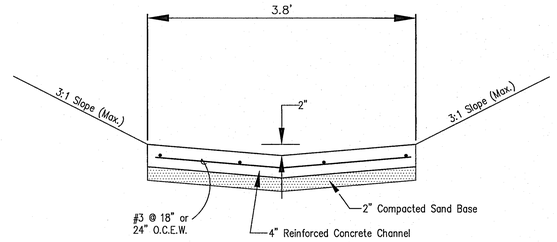


TYP. FLUME DETAIL

AS-BUILT DRAWINGS

THIS DRAWING HAS BEEN REVISED TO CONFORM TO THE CONSTRUCTION RECORDS PROVIDED BY THE CONTRACTOR. ALIGNMENT AND GRADES SHOWN ON THIS DRAWING WERE NOT FIELD VERIFIED BY THE ENGINEER.

TIM C. SPIARS, P.E.

1/25/16

DATE

Benchmark No. 1

Top of the south end of a headwall being 21 feet north of the southeast corner of the subject tract (said southeast corner being in the approximate center line of County Road 56). Elevation = 668.10

Benchmark No. 2

Being a pk nail found at the centerline intersection of Mellanie Ct and Tolleson Drive. Elevation = 668.00

## CAUTION !!!

### EXISTING UTILITIES

EXISTING UTILITIES AND UNDERGROUND FACILITIES INDICATED ON THESE PLANS HAVE BEEN LOCATED FROM REFERENCE INFORMATION. IT SHALL BE THE RESPONSIBILITY OF THE CONTRACTOR TO VERIFY BOTH HORIZONTALLY AND VERTICALLY THE LOCATION OF ALL EXISTING UTILITIES AND UNDERGROUND FACILITIES PRIOR TO CONSTRUCTION, TO TAKE NECESSARY PRECAUTIONS IN ORDER TO PROTECT ALL FACILITIES ENCOUNTERED. THE CONTRACTOR SHALL PRESERVE AND PROTECT ALL EXISTING UTILITIES FROM DAMAGE DURING CONSTRUCTION.

CALL 1-800-344-8377 (DIG-TESS) OR OTHER UTILITY LOCATION SERVICES 48 HOURS PRIOR TO CONSTRUCTION ACTIVITY. SPIARS ENGINEERING, INC. IS NOT RESPONSIBLE FOR KNOWING ALL EXISTING UTILITIES OR DEPICTING EXACT LOCATIONS OF UTILITIES ON DRAWINGS.

P-201402-01


spiars ENGINEERING
765 Custer Road, Suite 100 • Plano, TX 75075 • (972) 422-0077 • TBPE No. F-2121


1/25/16

# PARKSIDE
CITY OF CELINA
COLLIN COUNTY, TEXAS
LOT GRADING DETAILS

Issue Dates:

| Date | Revisions |
|---|---|

Scale: NA
Drawn By: RAS
Checked By: JMH
Sheet 25 of 26
SEI No. 13-157


Drawing: G:\2013 JOBS\13-157 Park Place Celina\Phase 1\13-157 lg.dwg Saved By: RShively Save Time: 10/9/2015 7:03:33 AM Plotted by: gbutler Plot Date: 1/25/2016 10:18 AM

## Legend

- ~ Denotes Proposed Stop Sign & Street Name Sign Location
- ~ Denotes Proposed 12' Street Light Standard Location—Offset Light Post From BFR
- ~ Denotes Proposed 30" Stop Sign As Per City Standards, Unless Shown Otherwise On Plan
- ~ Denotes Proposed 2 Blade Street Name Signs

Note!!
See Details on sheet Det-5

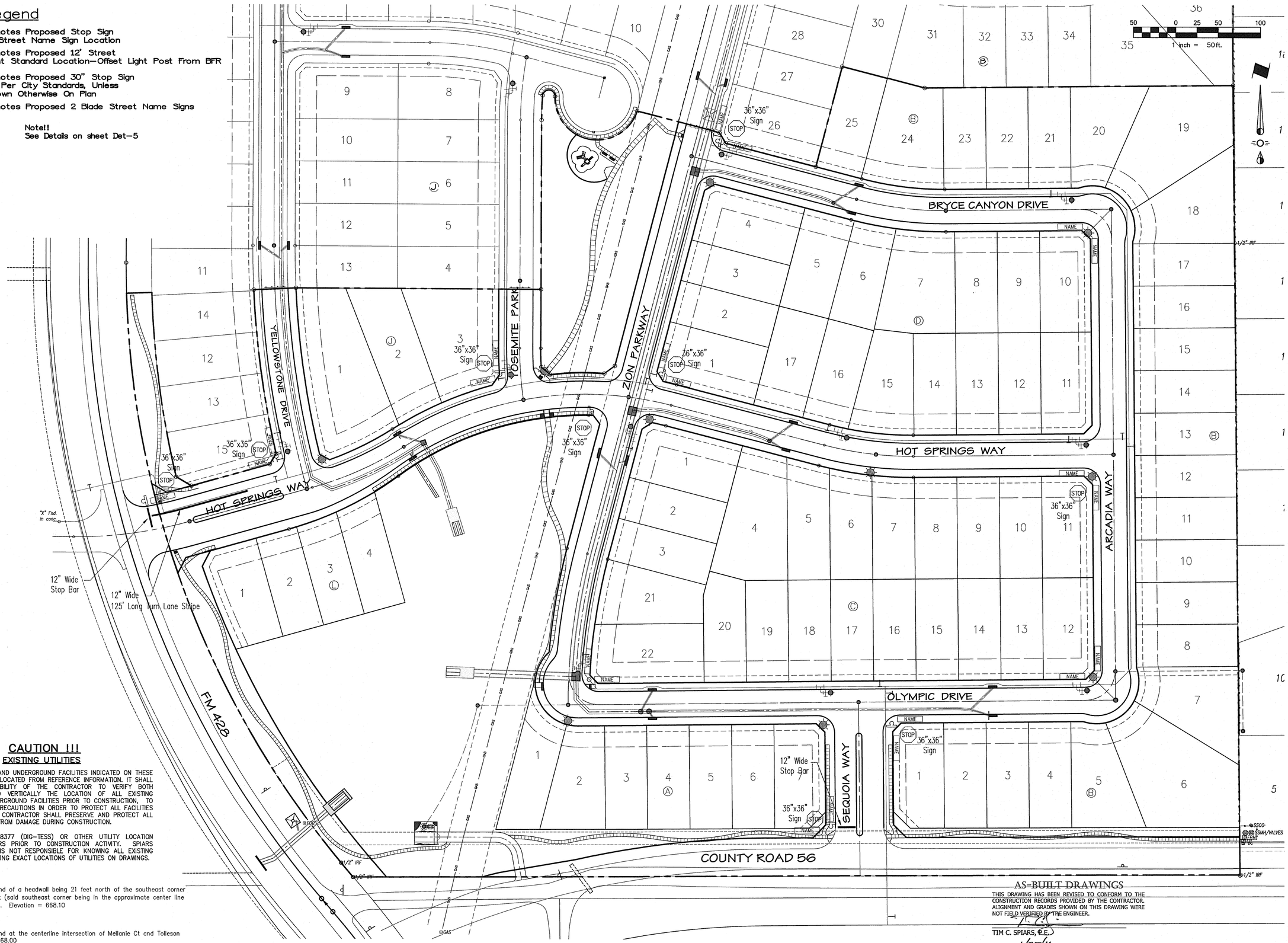


## CAUTION !!!
### EXISTING UTILITIES

EXISTING UTILITIES AND UNDERGROUND FACILITIES INDICATED ON THESE PLANS HAVE BEEN LOCATED FROM REFERENCE INFORMATION. IT SHALL BE THE RESPONSIBILITY OF THE CONTRACTOR TO VERIFY BOTH HORIZONTALLY AND VERTICALLY THE LOCATION OF ALL EXISTING UTILITIES AND UNDERGROUND FACILITIES PRIOR TO CONSTRUCTION, TO TAKE NECESSARY PRECAUTIONS IN ORDER TO PROTECT ALL FACILITIES ENCOUNTERED. THE CONTRACTOR SHALL PRESERVE AND PROTECT ALL EXISTING UTILITIES FROM DAMAGE DURING CONSTRUCTION.

CALL 1-800-344-8377 (DIG-TESS) OR OTHER UTILITY LOCATION SERVICES 48 HOURS PRIOR TO CONSTRUCTION ACTIVITY. SPIARS ENGINEERING, INC. IS NOT RESPONSIBLE FOR KNOWING ALL EXISTING UTILITIES OR DEPICTING EXACT LOCATIONS OF UTILITIES ON DRAWINGS.

Benchmark No. 1

Top of the south end of a headwall being 21 feet north of the southeast corner of the subject tract (said southeast corner being in the approximate center line of County Road 56). Elevation = 668.10

Benchmark No. 2

Being a pk nail found at the centerline intersection of Mellanie Ct and Tolleson Drive. Elevation = 668.00

AS-BUILT DRAWINGS

THIS DRAWING HAS BEEN REVISED TO CONFORM TO THE CONSTRUCTION RECORDS PROVIDED BY THE CONTRACTOR. ALIGNMENT AND GRADES SHOWN ON THIS DRAWING WERE NOT FIELD VERIFIED BY THE ENGINEER.

TIM C. SPIARS, P.E.

1/25/16
DATE

P-201402-01


spiars ENGINEERING
765 Custer Road, Suite 100 • Plano, TX 75075 • (972) 422-0077 • TBPE No. F-2121


STATE OF TEXAS
TIMOTHY C. SPIARS
REGISTERED
PROFESSIONAL ENGINEER
1/25/16

# PARKSIDE
CITY OF CELINA
COLLIN COUNTY, TEXAS
STREET LIGHTING & SIGNAGE PLAN

Issue Dates:

| Revisions | Date |
|---|---|
| Revised H&B Trail & Sidewalks | 10/14/14 |
| Revised H&B Trail & Sidewalks | 11/04/14 |

Scale: 1"=50'
Drawn By: RAS
Checked By: JMH

Sheet 26 of 26

SEI No. 13-157

Plotted by: gpatton Plot Date: 1/25/2016 10:16 AM
Drawing: G:\2013\ 2005\13-157 Park Place Celina\Phase 1\13-157 sp.dwg Saved By: Gpatton Save Time: 12/4/2014 2:20:49 PM

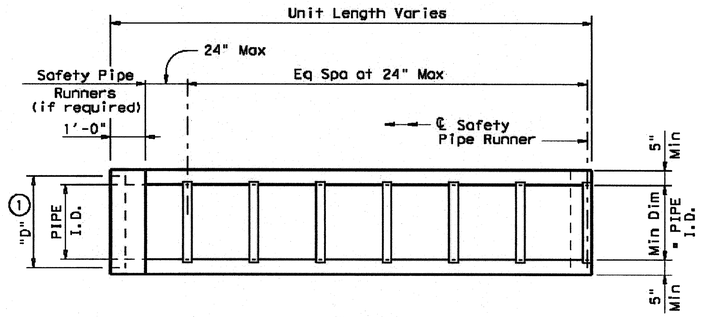


## PLAN

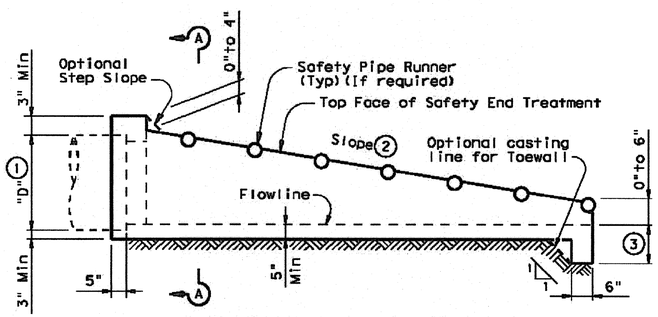


## LONGITUDINAL ELEVATION

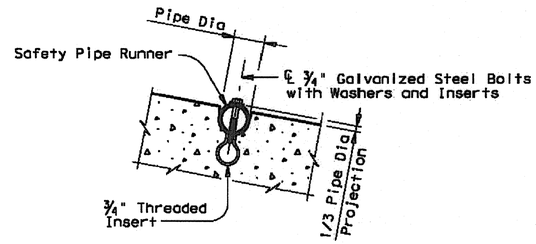


## INSTALLATION DETAIL FOR SAFETY PIPE RUNNERS

(If required)

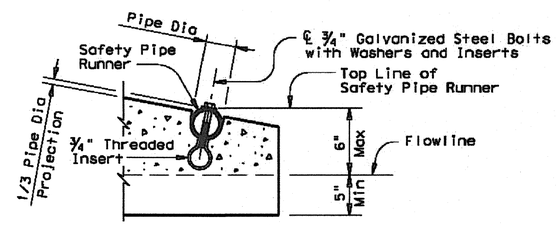


OPTION A

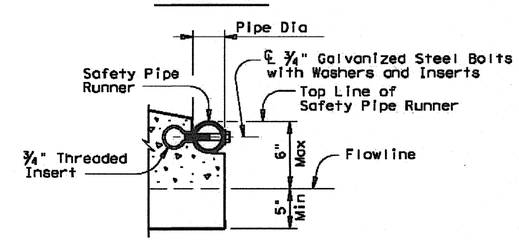


OPTION B

## END DETAILS FOR INSTALLATION OF SAFETY PIPE RUNNERS

(If required)

| PIPE I.D. | PIPE WALL "B" THICKNESS | "D" (1) | MAXIMUM SLOPE | MINIMUM LENGTH OF UNIT | PIPE RUNNERS REQUIRED | | REQUIRED PIPE RUNNER SIZES | | |
|---|---|---|---|---|---|---|---|---|---|
| | | | | | SINGLE PIPE | MULTIPLE PIPE | NOMINAL DIA. | O.D. | I.D. |
| 12" | 2" | 17" | 6:1 | 4'-9" | No | Yes, for >2 pipes | 3" STD | 3.500" | 3.068" |
| 15" | 2 ¼" | 20 ½" | 6:1 | 6'-5" | No | Yes, for >2 pipes | 3" STD | 3.500" | 3.068" |
| 18" | 2 ½" | 24" | 6:1 | 8'-0" | No | Yes, for >2 pipes | 3" STD | 3.500" | 3.068" |
| 24" | 3" | 31" | 6:1 | 11'-3" | No | Yes, for >2 pipes | 3" STD | 3.500" | 3.068" |
| 30" | 3 ½" | 38 ½" | 6:1 | 14'-8" | No | Yes | 4" STD | 4.500" | 4.026" |
| 36" | 4" | 45 ½" | 6:1 | 17'-11" | Yes | Yes | 4" STD | 4.500" | 4.026" |
| 42" | 4 ½" | 52 ½" | 6:1 | 21'-2" | Yes | Yes | 4" STD | 4.500" | 4.026" |

(1) Dimension "D" is based on ASTM C-76, Class III, Wall "B" thickness. If any other wall thickness is used, dimension "D" must be adjusted accordingly.

(2) Slope as shown elsewhere in the plans. Slope of 6:1 or flatter is required for vehicle safety.

(3) Toewall to be used only when dimension is shown elsewhere in the plans.

(4) The top 4" of void between Precast End Treatments shall be filled with concrete Riprap and shall be considered subsidiary to Safety End Treatment.

(5) Clear distance between pipes shall be adjusted to provide for the minimum distance between safety end treatments.

(6) Cement stabilized bedding and backfill shall be in accordance with the Item, "Excavation and Backfill for Structures". Bedding and backfill shall be considered subsidiary to the Item "Safety End Treatment". When concrete riprap is specified around the safety end treatment, backfill shall be as directed by Engineer.

**GENERAL NOTES:**

Precast safety end treatment for reinforced concrete pipe may be used for TYPE II end treatment as specified in Item "Safety End Treatment".

When Precast Safety End Treatment is used as a Contractor's alternate to mitered RCP, Riprap will not be required unless noted otherwise on the plans.

Synthetic fibers listed on the "Fibers for Concrete" Material Producer List (MPL) may be used in lieu of steel reinforcing in riprap concrete unless noted otherwise.

Manufacture of this product shall conform to requirements of Item "Safety End Treatment" except as noted below :

A. Minimum reinforcing shall be #4 at 6" (Grade 40) or #4 at 9" (Grade 60) each way or 6 x 6 - W12 x W12 or 5 x 5 - W10 x W10 welded wire fabric.

B. Concrete for precast (steel formed) sections shall be Class "C" with a minimum compressive strength of 3600 psi.

At the option and expense of the Contractor the next larger size of Safety End Treatment may be furnished; as long as the "D" dimension cast is that of the required size of pipe.

Pipe Runners are designed for a traversing load of 10,000 Lbs at yield as recommended by Research Report 280-2F, "Safety Treatment of Roadside Parallel-Drainage Structures", Texas Transportation Institute, March 1981.

Pipe Runners shall conform to the requirements of ASTM A53 (Type E or S, Grade B), ASTM A500 (Grade B), or API 5LX52.

All steel components except reinforcing, shall be galvanized after fabrication. Galvanizing damaged during transport or construction shall be repaired in accordance with the specifications.

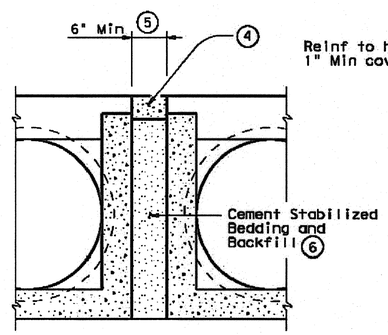


MULTIPLE PIPE INSTALLATION

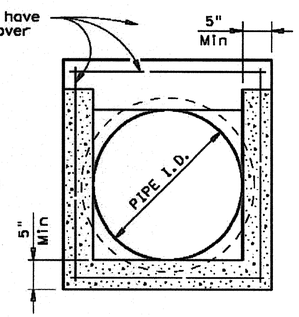


OPTION WITH SQUARE BOTTOM

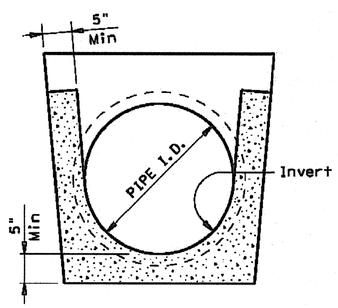


OPTION WITH INVERT BOTTOM

## SECTION A-A

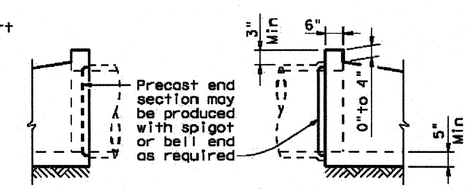


## OPTIONAL JOINT

(Showing Joint between RCP and Precast Safety End Treatment)

Texas Department of Transportation
Bridge Division

# PRECAST SAFETY END TREATMENT

## TYPE II ~ PARALLEL DRAINAGE

## PSET-SP

| FILE: psetspse.dgn | DN: RLW | CK: KLR | DW: JTR | CK: GAF |
|---|---|---|---|---|
| © TxDOT February 2010 | DISTRICT | FEDERAL AID PROJECT | | SHEET |
| REVISIONS 11-10: Add note for synthetic fibers. | COUNTY | CONTROL | SECT | JOB | HIGHWAY |

DISCLAIMER: The use of this standard is governed by the "Texas Engineering Practice Act". No warranty of any kind is made by TxDOT for any purpose whatsoever. TxDOT assumes no responsibility for the conversion of this standard to other formats or for incorrect results or damages resulting from its use.

LEVELS DISPLAYED | ACC:

P-201402-01 Det-1

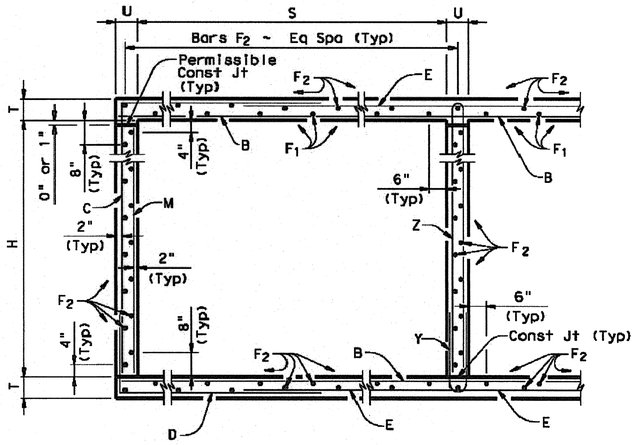


## TYPICAL SECTION

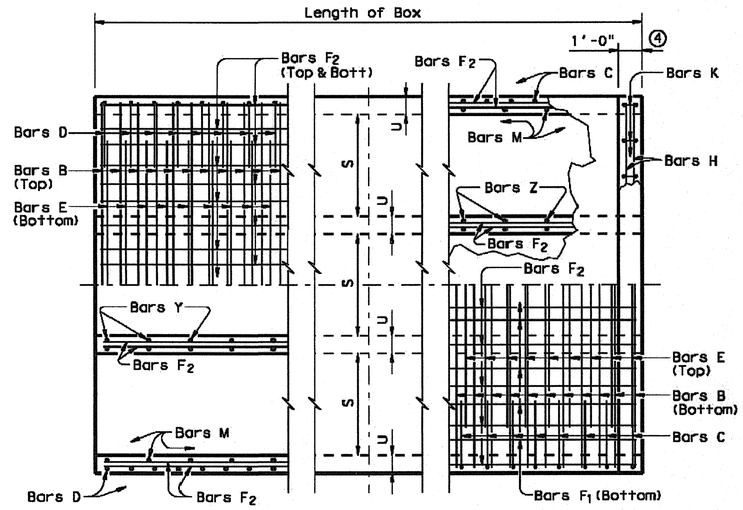


## PART PLANS

① 0" min to 5'-0" max. Estimated curb heights are shown elsewhere in the plans. For structures with pedestrian rail, bicycle rail or curbs taller than 1'-0", refer to ECD standard. For structures with T6 bridge rail, refer to T6-CM standard. For structures with traffic rail, other than T6, refer to RAC standard.

② For vehicle safety, the following requirements must be met:
- For structures without bridge rail, curbs shall project no more than 3" above finished grade.
- For structures with bridge rail, curbs shall be flush with finished grade.

Curb heights shall be reduced, if necessary, to meet the above requirements. No changes will be made in quantities and no additional compensation will be allowed for this work.

③ For curbs less than 1'-0" high, tilt bars K or reduce bar height as necessary to maintain cover. For curbs less than 3" high, bars K may be omitted.

④ 1'-0" typical. 2'-0" when RAC standard is referred to elsewhere in the plans.

Deformed welded wire reinforcement (WWR) meeting the requirements of ASTM A1064 may be used to replace conventional reinforcement shown at the Contractor's option. The area of required reinforcement may be reduced by the ratio of 60 ksi / 70 ksi. Spacing of WWR is limited to 4" Min and 18" Max. When required, provide lap splices in the WWR of the same length required for the equivalent bar size, rounded up for wire sizes between conventional bar sizes.

Example Conversion: Replacement of No. 6 Gr 60 at 6" Spacing with WWR.
WWR required = (0.44 sq in/ 0.5') x (60 ksi/70 ksi) = 0.754 sq in/ft.
If D30.6 wire is used to meet the 0.754 sq in/ft requirement in this example, the required spacing = (0.306 sq in/ 0.754 sq in/ft) x 12 in/ft = 4.87" Max spacing.
Required lap length for the provided D30.6 wire is 2'-2" (Lap required for uncoated No. 5 bars, as shown in Item 440).

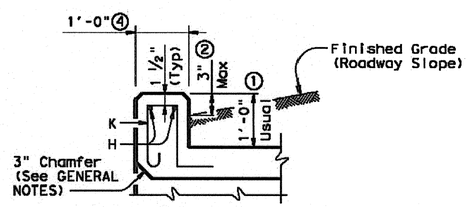


## SECTION THRU CURB

| H | Bar Dimensions | |
|---|---|---|
| | "X" | "Y" |
| 2'-0" | 2'-5" | 2'-2" |
| 3'-0" | 3'-5" | 2'-2" |
| 4'-0" | 4'-5" | 2'-2" |
| 5'-0" | 5'-5" | 2'-2" |
| | | |

**GENERAL NOTES:**

Designed according to AASHTO LRFD Specifications.
Designed to the maximum fill height shown.
All reinforcing steel shall be Grade 60.
All concrete shall be Class "C" with these exceptions: use Class "S" for top slabs of culverts with overlay, with 1-to-2 course surface treatment, or with the top slab as the final riding surface.
Class "C" concrete shall have a minimum compressive strength of 3,600 psi. Class "S" concrete shall have a minimum compressive strength of 4,000 psi.
The use of permanent forms is not allowed.
The bottom edge of the top slab shall be chamfered 3" at the entrance.
Reinforcing bars shall be adjusted to provide a minimum of 1 1/4" clear cover.
Construction joints shown at the flow line may be raised a maximum of 6" at the Contractor's option. If this option is used, Bars M may be cut off or raised, Bars C and D may be reversed, and Bars Y and Z may be reversed.
See standard MC-MD for skewed ends, angle sections and lengthening details.

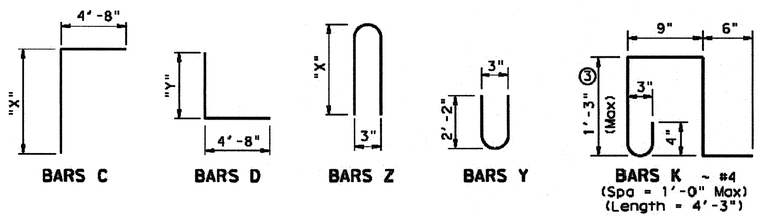


HL93 LOADING — SHEET 1 OF 2

Texas Department of Transportation
Bridge Division

# MULTIPLE BOX CULVERTS CAST-IN-PLACE
## 5'-0" SPAN
## 0' TO 20' FILL

## MC-5-20

| | | | | | |
|---|---|---|---|---|---|
| FILE: mc520ste.dgn | DN: GAF | CK: LMW | DW: BWH/TxDOT | CK: GAF | |
| ©TxDOT February 2010 | DISTRICT | FEDERAL AID PROJECT | | SHEET | |
| REVISIONS 10-12: Added WWR | COUNTY | | CONTROL | SECT | JOB | HIGHWAY |

DISCLAIMER:
The use of this standard is governed by the "Texas Engineering Practice Act". No warranty of any kind is made by TxDOT for the conversion of this standard to other formats or for incorrect results or damages resulting from its use.

LEVELS DISPLAYED | ACC:

P-201402-01 Det-2

# BILLS OF REINFORCING STEEL (For Box Length = 40 feet)

| NUMBER OF SPANS | SECTION DIMENSIONS S | H | T | U | Bars B No. | Size | Spa | Length | Wt | Bars C & D No. | Size | Spa | Bar C Length | Bar C Wt | Bar D Length | Bar D Wt | Bars E No. | Size | Spa | Length | Wt | Bars $F_1$ ~#4 No. | Spa | Length | Wt | Bars $F_2$ ~#4 at 1'-6" Max No. | Length | Wt | Bars M~#4 at 1'-6" Max No. | Length | Wt | Bars Y & Z~#4 at 1'-0" Max No. | Bar Y Length | Bar Y Wt | Bar Z Length | Bar Z Wt | Bars H 4~#4 Length | Weight | Bars K No. | Weight |
|---|---|---|---|---|---|---|---|---|---|---|---|---|---|---|---|---|---|---|---|---|---|---|---|---|---|---|---|---|---|---|---|---|---|---|---|---|---|---|---|---|---|
| 2 | 5'-0" | 2'-0" | 7" | 7" | 194 | #4 | 5" | 11'- 6" | 1,490 | 162 | #4 | 6" | 7'- 1" | 767 | 6'-10" | 739 | 162 | #5 | 6" | 5'- 8" | 957 | 14 | 8" | 39'-9" | 372 | 38 | 39'-9" | 1,009 | 56 | 2'- 0" | 75 | 41 | 4'- 6" | 123 | 5'- 0" | 137 | 11'- 6" | 31 | 26 | 74 |
| 3 | 5'-0" | 2'-0" | 7" | 7" | 194 | #4 | 5" | 17'- 1" | 2,214 | 162 | #4 | 6" | 7'- 1" | 767 | 6'-10" | 739 | 162 | #5 | 6" | 11'- 3" | 1,901 | 21 | 8" | 39'-9" | 558 | 54 | 39'-9" | 1,434 | 56 | 2'- 0" | 75 | 82 | 4'- 6" | 246 | 5'- 0" | 274 | 17'- 1" | 46 | 36 | 102 |
| 4 | 5'-0" | 2'-0" | 7" | 7" | 194 | #4 | 5" | 22'- 8" | 2,937 | 162 | #4 | 6" | 7'- 1" | 767 | 6'-10" | 739 | 162 | #5 | 6" | 16'-10" | 2,844 | 28 | 8" | 39'-9" | 743 | 70 | 39'-9" | 1,859 | 56 | 2'- 0" | 75 | 123 | 4'- 6" | 370 | 5'- 0" | 411 | 22'- 8" | 61 | 48 | 136 |
| 5 | 5'-0" | 2'-0" | 7" | 7" | 194 | #4 | 5" | 28'- 3" | 3,661 | 162 | #4 | 6" | 7'- 1" | 767 | 6'-10" | 739 | 162 | #5 | 6" | 22'- 5" | 3,788 | 35 | 8" | 39'-9" | 929 | 86 | 39'-9" | 2,284 | 56 | 2'- 0" | 75 | 164 | 4'- 6" | 493 | 5'- 0" | 548 | 28'- 3" | 75 | 60 | 170 |
| 6 | 5'-0" | 2'-0" | 7" | 7" | 194 | #4 | 5" | 33'-10" | 4,385 | 162 | #4 | 6" | 7'- 1" | 767 | 6'-10" | 739 | 162 | #5 | 6" | 28'- 0" | 4,731 | 42 | 8" | 39'-9" | 1,115 | 102 | 39'-9" | 2,708 | 56 | 2'- 0" | 75 | 205 | 4'- 6" | 616 | 5'- 0" | 685 | 33'-10" | 90 | 70 | 199 |
| 2 | 5'-0" | 3'-0" | 7" | 7" | 194 | #4 | 5" | 11'- 6" | 1,490 | 138 | #4 | 7" | 8'- 1" | 745 | 6'-10" | 630 | 162 | #5 | 6" | 5'- 8" | 957 | 14 | 8" | 39'-9" | 372 | 44 | 39'-9" | 1,168 | 56 | 3'- 0" | 112 | 41 | 4'- 6" | 123 | 7'- 0" | 192 | 11'- 6" | 31 | 26 | 74 |
| 3 | 5'-0" | 3'-0" | 7" | 7" | 194 | #4 | 5" | 17'- 1" | 2,214 | 138 | #4 | 7" | 8'- 1" | 745 | 6'-10" | 630 | 162 | #5 | 6" | 11'- 3" | 1,901 | 21 | 8" | 39'-9" | 558 | 62 | 39'-9" | 1,646 | 56 | 3'- 0" | 112 | 82 | 4'- 6" | 246 | 7'- 0" | 383 | 17'- 1" | 46 | 36 | 102 |
| 4 | 5'-0" | 3'-0" | 7" | 7" | 194 | #4 | 5" | 22'- 8" | 2,937 | 138 | #4 | 7" | 8'- 1" | 745 | 6'-10" | 630 | 162 | #5 | 6" | 16'-10" | 2,844 | 28 | 8" | 39'-9" | 743 | 80 | 39'-9" | 2,124 | 56 | 3'- 0" | 112 | 123 | 4'- 6" | 370 | 7'- 0" | 575 | 22'- 8" | 61 | 48 | 136 |
| 5 | 5'-0" | 3'-0" | 7" | 7" | 194 | #4 | 5" | 28'- 3" | 3,661 | 138 | #4 | 7" | 8'- 1" | 745 | 6'-10" | 630 | 162 | #5 | 6" | 22'- 5" | 3,788 | 35 | 8" | 39'-9" | 929 | 98 | 39'-9" | 2,602 | 56 | 3'- 0" | 112 | 164 | 4'- 6" | 493 | 7'- 0" | 767 | 28'- 3" | 75 | 60 | 170 |
| 6 | 5'-0" | 3'-0" | 7" | 7" | 194 | #4 | 5" | 33'-10" | 4,385 | 138 | #4 | 7" | 8'- 1" | 745 | 6'-10" | 630 | 162 | #5 | 6" | 28'- 0" | 4,731 | 42 | 8" | 39'-9" | 1,115 | 116 | 39'-9" | 3,080 | 56 | 3'- 0" | 112 | 205 | 4'- 6" | 616 | 7'- 0" | 959 | 33'-10" | 90 | 70 | 199 |
| 2 | 5'-0" | 4'-0" | 7" | 7" | 194 | #4 | 5" | 11'- 6" | 1,490 | 138 | #4 | 7" | 9'- 1" | 837 | 6'-10" | 630 | 162 | #5 | 6" | 5'- 8" | 957 | 14 | 8" | 39'-9" | 372 | 44 | 39'-9" | 1,168 | 56 | 4'- 0" | 150 | 41 | 4'- 6" | 123 | 9'- 0" | 246 | 11'- 6" | 31 | 26 | 74 |
| 3 | 5'-0" | 4'-0" | 7" | 7" | 194 | #4 | 5" | 17'- 1" | 2,214 | 138 | #4 | 7" | 9'- 1" | 837 | 6'-10" | 630 | 162 | #5 | 6" | 11'- 3" | 1,901 | 21 | 8" | 39'-9" | 558 | 62 | 39'-9" | 1,646 | 56 | 4'- 0" | 150 | 82 | 4'- 6" | 246 | 9'- 0" | 493 | 17'- 1" | 46 | 36 | 102 |
| 4 | 5'-0" | 4'-0" | 7" | 7" | 194 | #4 | 5" | 22'- 8" | 2,937 | 138 | #4 | 7" | 9'- 1" | 837 | 6'-10" | 630 | 162 | #5 | 6" | 16'-10" | 2,844 | 28 | 8" | 39'-9" | 743 | 80 | 39'-9" | 2,124 | 56 | 4'- 0" | 150 | 123 | 4'- 6" | 370 | 9'- 0" | 739 | 22'- 8" | 61 | 48 | 136 |
| 5 | 5'-0" | 4'-0" | 7" | 7" | 194 | #4 | 5" | 28'- 3" | 3,661 | 138 | #4 | 7" | 9'- 1" | 837 | 6'-10" | 630 | 162 | #5 | 6" | 22'- 5" | 3,788 | 35 | 8" | 39'-9" | 929 | 98 | 39'-9" | 2,602 | 56 | 4'- 0" | 150 | 164 | 4'- 6" | 493 | 9'- 0" | 986 | 28'- 3" | 75 | 60 | 170 |
| 6 | 5'-0" | 4'-0" | 7" | 7" | 194 | #4 | 5" | 33'-10" | 4,385 | 138 | #4 | 7" | 9'- 1" | 837 | 6'-10" | 630 | 162 | #5 | 6" | 28'- 0" | 4,731 | 42 | 8" | 39'-9" | 1,115 | 116 | 39'-9" | 3,080 | 56 | 4'- 0" | 150 | 205 | 4'- 6" | 616 | 9'- 0" | 1,232 | 33'-10" | 90 | 70 | 199 |
| 2 | 5'-0" | 5'-0" | 7" | 7" | 194 | #4 | 5" | 11'- 6" | 1,490 | 138 | #4 | 7" | 10'- 1" | 930 | 6'-10" | 630 | 162 | #5 | 6" | 5'- 8" | 957 | 14 | 8" | 39'-9" | 372 | 50 | 39'-9" | 1,328 | 56 | 5'- 0" | 187 | 41 | 4'- 6" | 123 | 11'- 0" | 301 | 11'- 6" | 31 | 26 | 74 |
| 3 | 5'-0" | 5'-0" | 7" | 7" | 194 | #4 | 5" | 17'- 1" | 2,214 | 138 | #4 | 7" | 10'- 1" | 930 | 6'-10" | 630 | 162 | #5 | 6" | 11'- 3" | 1,901 | 21 | 8" | 39'-9" | 558 | 70 | 39'-9" | 1,859 | 56 | 5'- 0" | 187 | 82 | 4'- 6" | 246 | 11'- 0" | 603 | 17'- 1" | 46 | 36 | 102 |
| 4 | 5'-0" | 5'-0" | 7" | 7" | 194 | #4 | 5" | 22'- 8" | 2,937 | 138 | #4 | 7" | 10'- 1" | 930 | 6'-10" | 630 | 162 | #5 | 6" | 16'-10" | 2,844 | 28 | 8" | 39'-9" | 743 | 90 | 39'-9" | 2,390 | 56 | 5'- 0" | 187 | 123 | 4'- 6" | 370 | 11'- 0" | 904 | 22'- 8" | 61 | 48 | 136 |
| 5 | 5'-0" | 5'-0" | 7" | 7" | 194 | #4 | 5" | 28'- 3" | 3,661 | 138 | #4 | 7" | 10'- 1" | 930 | 6'-10" | 630 | 162 | #5 | 6" | 22'- 5" | 3,788 | 35 | 8" | 39'-9" | 929 | 110 | 39'-9" | 2,921 | 56 | 5'- 0" | 187 | 164 | 4'- 6" | 493 | 11'- 0" | 1,205 | 28'- 3" | 75 | 60 | 170 |
| 6 | 5'-0" | 5'-0" | 7" | 7" | 194 | #4 | 5" | 33'-10" | 4,385 | 138 | #4 | 7" | 10'- 1" | 930 | 6'-10" | 630 | 162 | #5 | 6" | 28'- 0" | 4,731 | 42 | 8" | 39'-9" | 1,115 | 130 | 39'-9" | 3,452 | 56 | 5'- 0" | 187 | 205 | 4'- 6" | 616 | 11'- 0" | 1,506 | 33'-10" | 90 | 70 | 199 |

## QUANTITIES

| NUMBER OF SPANS | Per foot of Barrel Conc (CY) | Reinf (Lb) | Curb Conc (CY) | Reinf (Lb) | Total Conc (CY) | Reinf (Lb) |
|---|---|---|---|---|---|---|
| 2 | 0.637 | 141.7 | 0.9 | 105 | 26.4 | 5,774 |
| 3 | 0.922 | 205.2 | 1.3 | 148 | 38.2 | 8,356 |
| 4 | 1.206 | 268.6 | 1.7 | 197 | 49.9 | 10,942 |
| 5 | 1.491 | 332.1 | 2.1 | 245 | 61.7 | 13,529 |
| 6 | 1.775 | 395.5 | 2.5 | 289 | 73.5 | 16,110 |
| 2 | 0.702 | 144.7 | 0.9 | 105 | 29.0 | 5,894 |
| 3 | 1.008 | 210.9 | 1.3 | 148 | 41.6 | 8,583 |
| 4 | 1.314 | 277.0 | 1.7 | 197 | 54.3 | 11,277 |
| 5 | 1.620 | 343.2 | 2.1 | 245 | 66.9 | 13,972 |
| 6 | 1.926 | 409.3 | 2.5 | 289 | 79.5 | 16,662 |
| 2 | 0.767 | 149.3 | 0.9 | 105 | 31.6 | 6,078 |
| 3 | 1.095 | 216.9 | 1.3 | 148 | 45.1 | 8,823 |
| 4 | 1.422 | 284.4 | 1.7 | 197 | 58.6 | 11,571 |
| 5 | 1.750 | 351.9 | 2.1 | 245 | 72.1 | 14,321 |
| 6 | 2.078 | 419.4 | 2.5 | 289 | 85.6 | 17,065 |
| 2 | 0.832 | 158.0 | 0.9 | 105 | 34.2 | 6,423 |
| 3 | 1.181 | 228.2 | 1.3 | 148 | 48.5 | 9,276 |
| 4 | 1.530 | 298.4 | 1.7 | 197 | 62.9 | 12,132 |
| 5 | 1.880 | 368.6 | 2.1 | 245 | 77.3 | 14,989 |
| 6 | 2.229 | 438.8 | 2.5 | 289 | 91.7 | 17,841 |

Deformed welded wire reinforcement (WWR) meeting the requirements of ASTM A1064 may be used to replace conventional reinforcement shown at the Contractor's option. The area of required reinforcement may be reduced by the ratio of 60 ksi / 70 ksi. Spacing of WWR is limited to 4" Min and 18" Max. When required, provide lap splices in the WWR of the same length required for the equivalent bar size, rounded up for wire sizes between conventional bar sizes.

Example Conversion: Replacement of No. 6 Gr 60 at 6" Spacing with WWR.
WWR required = (0.44 sq in/ 0.5') x (60 ksi/70 ksi) = 0.754 sq in/ft.
If D30.6 wire is used to meet the 0.754 sq in/ft requirement in this example, the required spacing = (0.306 sq in/ 0.754 sq in/ft) x 12 in/ft = 4.87" Max spacing.
Required lap length for the provided D30.6 wire is 2'-2" (Lap required for uncoated No. 5 bars, as shown in Item 440).

DISCLAIMER:
The use of this standard is governed by the "Texas Engineering Practice Act". No warranty of any kind is made by TxDOT for any purpose whatsoever. TxDOT assumes no responsibility for the conversion of this standard to other formats or for incorrect results or damages resulting from its use.

LEVELS DISPLAYED | ACC:

HL93 LOADING — SHEET 2 OF 2

Texas Department of Transportation
Bridge Division

# MULTIPLE BOX CULVERTS CAST-IN-PLACE
## 5'-0" SPAN
## 0' TO 20' FILL

# MC-5-20

| FILE: mc520ste.dgn | DN: GAF | CK: LMW | DW: BWH/TxDOT | CK: GAF |
|---|---|---|---|---|
| ©TxDOT February 2010 | DISTRICT | FEDERAL AID PROJECT | | SHEET |
| REVISIONS 10-12: Added WWR | COUNTY | CONTROL | SECT | JOB | HIGHWAY |

P-201402-01 Det-3

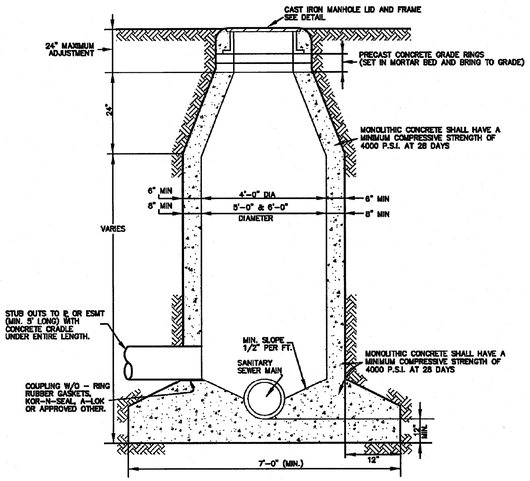


NOTES:
1. THE DIAMETER OF A MANHOLE CONSTRUCTED OVER THE CENTER OF A SEWER SHOULD VARY WITH THE SIZE OF THE SEWER. FOR EIGHT-INCH (8"), TEN-INCH (10"), AND TWELVE-INCH (12"), THE MANHOLE SHALL BE FOUR-FOOT (4') MINIMUM DIAMETER. FOR FIFTEEN-INCH (15"), EIGHTEEN-INCH (18"), TWENTY-ONE-INCH (21"), TWENTY-FOUR-INCH (24") AND TWENTY-SEVEN-INCH (27") SHALL BE FIVE-FOOT (5') MINIMUM DIAMETER; THIRTY-INCH (30") AND THIRTY-SIX-INCH (36") SHALL BE SIX-FOOT (6') MINIMUM DIAMETER. MANHOLES DEEPER THAN FIFTEEN FEET (15') SHALL BE A MINIMUM OF FIVE-FOOT (5') DIAMETER.

STANDARD
CAST IN PLACE MANHOLE
NTS

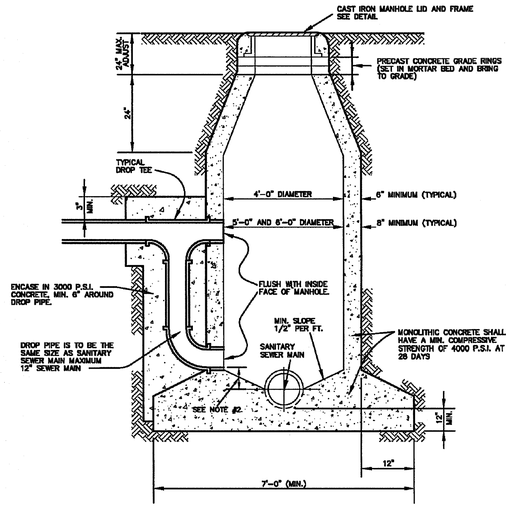


NOTES:
1. THE DIAMETER OF A MANHOLE CONSTRUCTED OVER THE CENTER OF A SEWER SHOULD VARY WITH THE SIZE OF THE SEWER. FOR EIGHT-INCH (8"), TEN-INCH (10"), AND TWELVE-INCH (12"), THE MANHOLE SHALL BE FOUR-FOOT (4') MINIMUM DIAMETER. FOR FIFTEEN-INCH (15"), EIGHTEEN-INCH (18"), TWENTY-ONE-INCH (21"), TWENTY-FOUR-INCH (24") AND TWENTY-SEVEN-INCH (27") SHALL BE FIVE-FOOT (5') MINIMUM DIAMETER; THIRTY-INCH (30") AND THIRTY-SIX-INCH (36") SHALL BE SIX-FOOT (6') MINIMUM DIAMETER. MANHOLES DEEPER THAN FIFTEEN FEET (15') SHALL BE A MINIMUM OF FIVE-FOOT (5') DIAMETER.

2. FLOWLINE OF DROP SHALL BE LOCATED BETWEEN THE CENTERLINE AND TOP OF SEWER MAIN.

MANHOLE
DROP CONNECTION
NTS

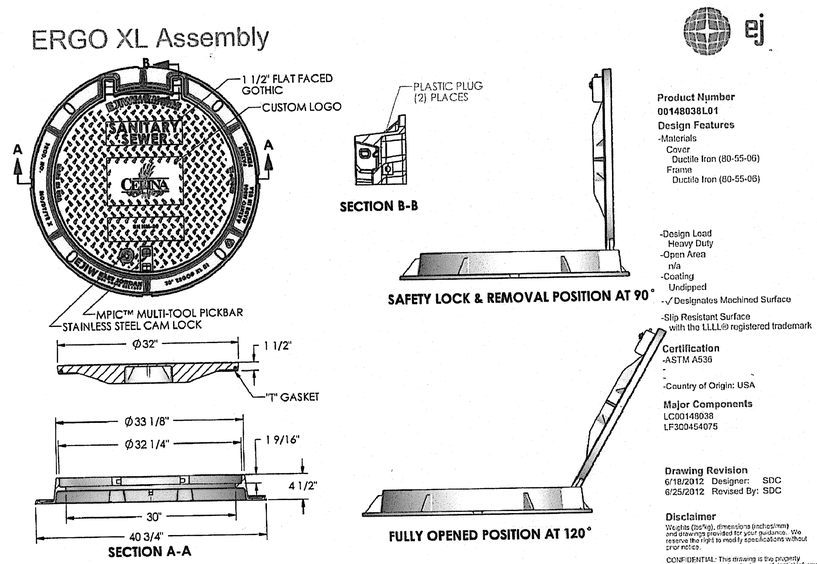


**Product Number**
00148038L01

**Design Features**
-Materials
Cover
Ductile Iron (80-55-06)
Frame
Ductile Iron (80-55-06)

-Design Load
Heavy Duty
-Open Area
n/a
-Coating
Undipped
-√ Designates Machined Surface

-Slip Resistant Surface
with the LLLL® registered trademark

**Certification**
-ASTM A536
-
-Country of Origin: USA

**Major Components**
LC00148038
LF300454075

**Drawing Revision**
6/18/2012 Designer: SDC
6/25/2012 Revised By: SDC

**Disclaimer**
Weights (lbs/kg), dimensions (inches/mm) and drawings provided for your guidance. We reserve the right to modify specifications without prior notice.

CONFIDENTIAL: This drawing is the property of EJ Group, Inc. and embodies confidential information, and/or trade marks, patents, trade secret information, and/or trade dress that is the property of EJ Group, Inc. Copyright © 2011 EJ Group, Inc. All rights reserved.

**Contact**
800.626.4653
ejco.com

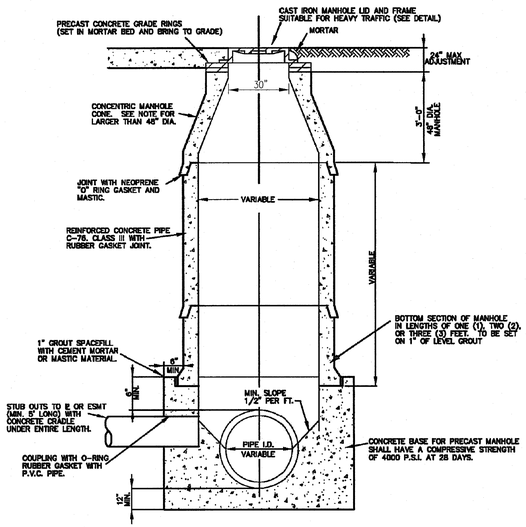


NOTES:
1. THE DIAMETER OF A MANHOLE CONSTRUCTED OVER THE CENTER OF A SEWER SHOULD VARY WITH THE SIZE OF THE SEWER. FOR EIGHT-INCH (8"), TEN-INCH (10"), AND TWELVE-INCH (12"), THE MANHOLE SHALL BE FOUR-FOOT (4') MINIMUM DIAMETER. FOR FIFTEEN-INCH (15"), EIGHTEEN-INCH (18"), TWENTY-ONE-INCH (21"), TWENTY-FOUR-INCH (24") AND TWENTY-SEVEN-INCH (27") SHALL BE FIVE-FOOT (5') MINIMUM DIAMETER; THIRTY-INCH (30") AND THIRTY-SIX-INCH (36") SHALL BE SIX-FOOT (6') MINIMUM DIAMETER. MANHOLES DEEPER THAN FIFTEEN FEET (15') SHALL BE A MINIMUM OF FIVE-FOOT (5') DIAMETER.

2. DROP MANHOLES SHALL BE REQUIRED WHEN THE INFLOW ELEVATION IS MORE THAN TWENTY-FOUR INCHES (24") ABOVE THE OUTFALL ELEVATION.

PRECAST
CONCRETE PIPE MANHOLE
NTS

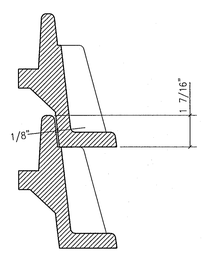


STACK DETAIL
(NTS)

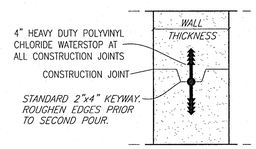


MANHOLE
CONSTRUCTION JOINT
KEYWAY WITH WATERSTOP

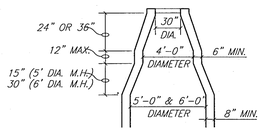


CONE TRANSITION
5' & 6' DIAMETER MANHOLES ONLY

*MANHOLE CONE NOTE:*
*FOR MANHOLES WITH DIAMETER LARGER THAN 48" I.D., A PRE-CAST FLAT TOP MANHOLE COVER AS PER A.S.T.M. C478 SHALL BE INSTALLED.*

## Celina Street Sign Example

Street Name: 6" initial uppercase letter followed by 4.5" lowercase letters
Must meet 2009 (or latest) MUTCD requirements
9" flat blank, high intensity prismatic

**Front:**
(Left to Right)

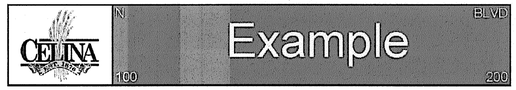


**Back:**
(Left to Right)

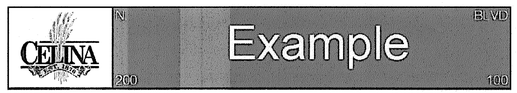


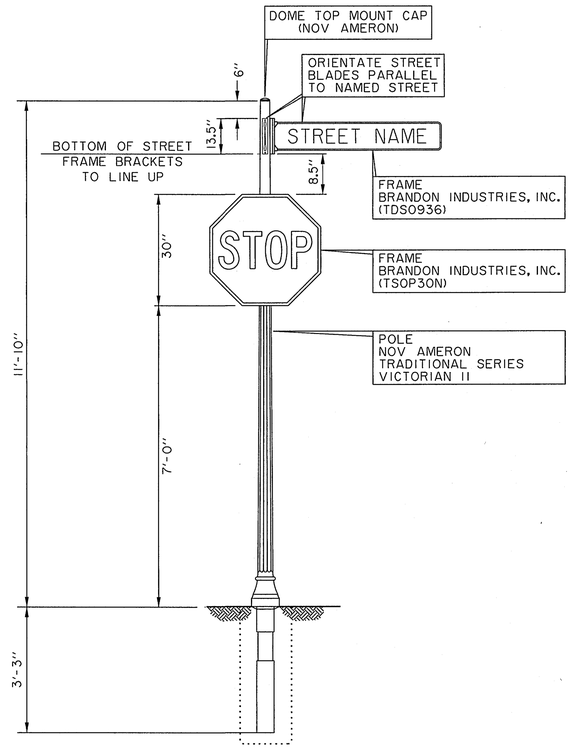


TYPICAL SIGN & POLE DETAIL
30" STOP SIGN
NTS

NOTE:
USE MANUFACTURERS
INSTALLATION GUIDELINES
AND PROCEDURES.
(PER CITY APPROVAL)

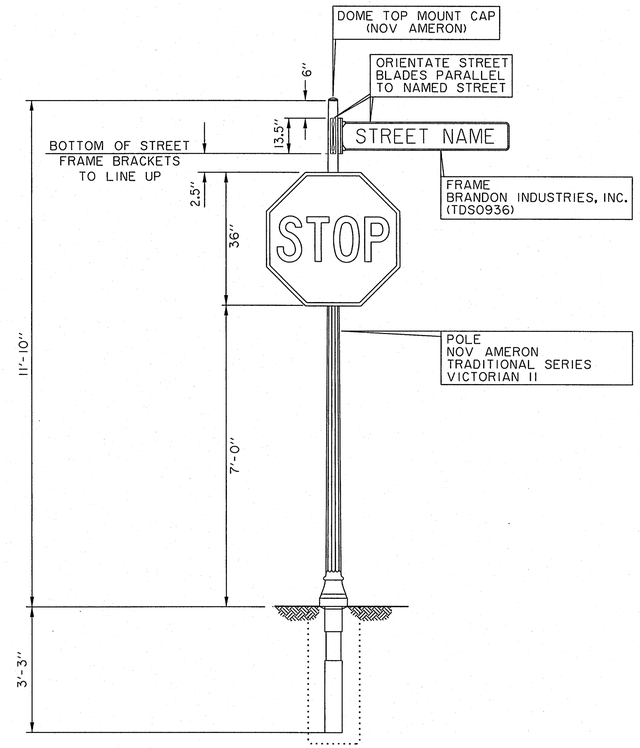


TYPICAL SIGN & POLE DETAIL
36" STOP SIGN
(Primrose Way At Light Farms Way)
NTS

NOTE:
USE MANUFACTURERS
INSTALLATION GUIDELINES
AND PROCEDURES.
(PER CITY APPROVAL)

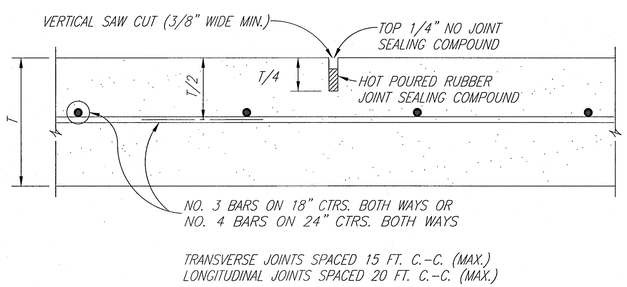


SAWED DUMMY JOINT

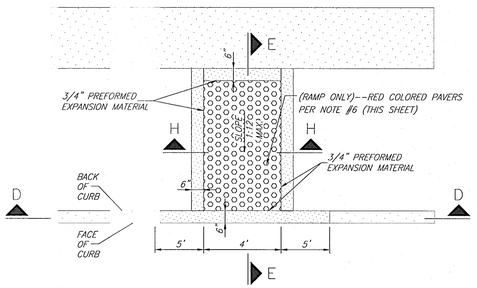


BARRIER FREE RAMP @ STRAIGHT CURB

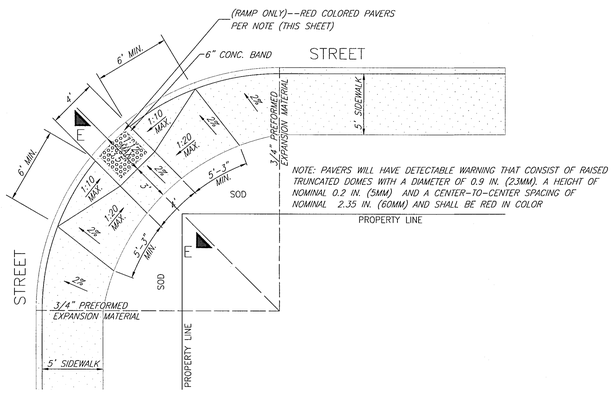


RAMP FOR 5 FEET SIDEWALK NEXT TO CURB

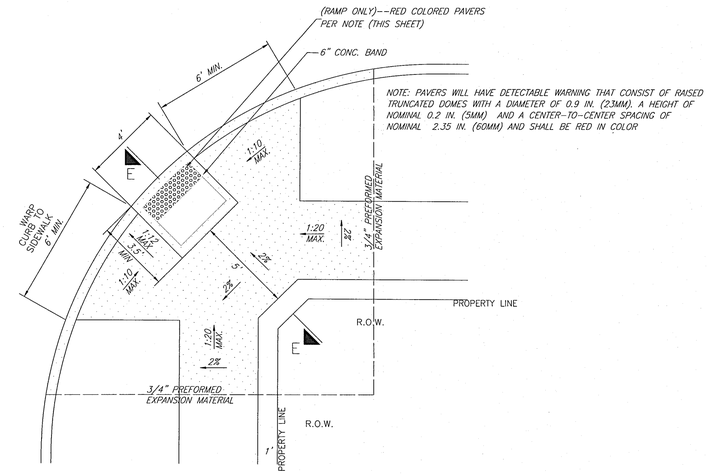


BARRIER FREE RAMP
STREET INTERSECTION
PLAN VIEW
NTS

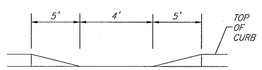


SECTION D-D

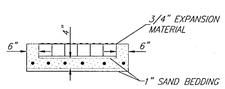


SECTION H-H

GENERAL NOTES:

1. BARRIER FREE RAMPS SHALL BE CONSTRUCTED AS EXTENSIONS OF STANDARD CONCRETE SIDEWALKS EXCEPT AS NOTED IN THESE DETAILS.
2. MAXIMUM SLOPE ON BARRIER FREE RAMPS SHALL NOT EXCEED 1" PER FOOT AT ANY LOCATION.
3. DESIGNS SHOWN ARE FOR 6" CURBS. FOR CURBS WITH HEIGHT GREATER THAN 6", DIMENSIONS SHALL BE INCREASED PROPORTIONATELY.
4. STREETS ON STEEP GRADE WILL REQUIRE LONGER TRANSITIONS ON UPGRADE SIDE.
5. LOCATION OF BARRIER FREE RAMP MAY BE SHIFTED TO CLEAR OBSTRUCTIONS WITH THE APPROVAL OF THE CITY ENGINEER.
6. ACCESS RAMP FROM STREET GRADE SHALL HAVE DETECTABLE WARNING GROVES THAT SHALL BE 1/4" TO 3/4" WIDE, 1/8" DEEP, SPACED 2" APART.
7. ALL LANDINGS ARE TO BE 5'X5' AREAS WITH 2% (MAX) SLOPES IN ANY DIRECTION

RAMP WITH DOMES

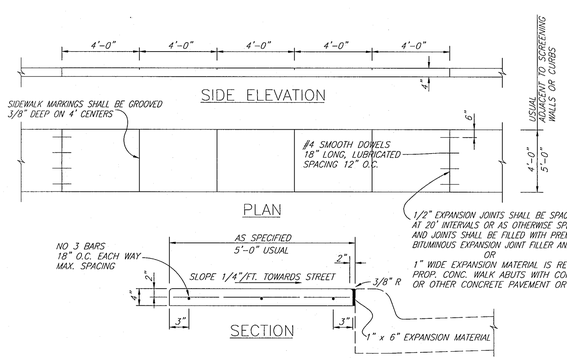


REINFORCED CONCRETE SIDEWALK
(SIDEWALK)

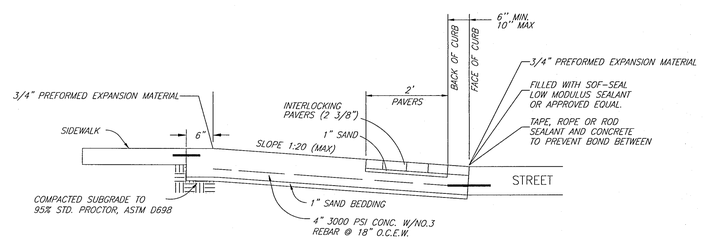


SECTION E-E
(BARRIER_FREE)

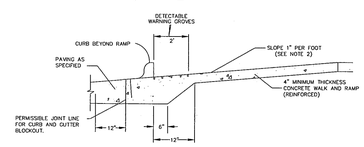


BARRIER FREE RAMP
TYPICAL SECTION THRU RESIDENTIAL RAMP
NTS

Drawing: G:\2013 jobs\13-157 park place salvia\Phase 1\13-157 details.dwg Saved By: Gaston Save Time: 12/12/2014 4:24:28 AM Plotted by gaston Plot Date: 1/26/2016 9:13 AM

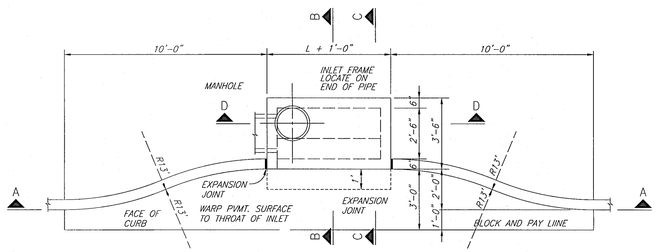


## PLAN – RECESSED INLET

(REC–INT1)

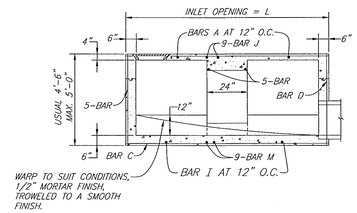


## SECTION A–A – STANDARD AND RECESSED INLETS

(SECT_A–A1)

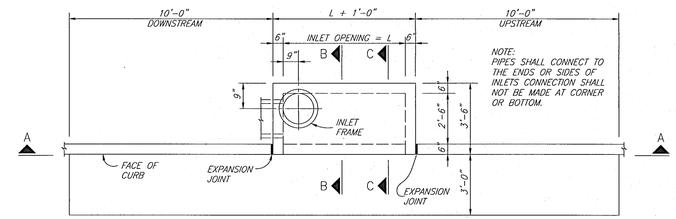


## PLAN – STANDARD INLET

## 4, 6, 8 AND 10 FOOT INLETS

(STDINLT1)

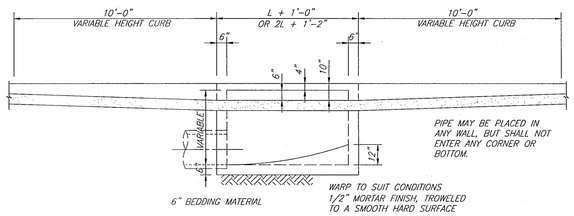


## SECTION A–A–RECESSED AND STANDARD INLETS

## 4, 6, 8, AND 10 FOOT INLETS

(PLAN–10)

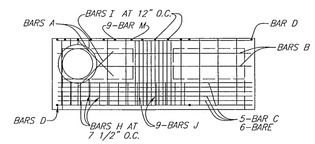


## PLAN – STANDARD INLET

(PLAN_STDINL)

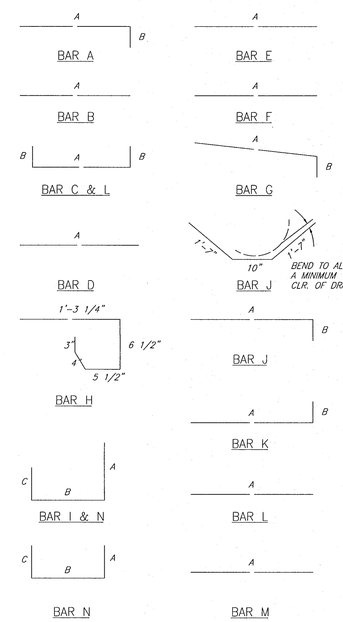


## BAR DIAGRAMS

(BARDIAG)

## REINFORCING STEEL SCHEDULE

DIMENSIONS SHOWN ARE FOR MAXIMUM SIZE INLETS

| INLET LENGTH | BAR TYPE | BAR DIA. (1/8 IN.) | NO. REQ'D | BAR DIMENSIONS | | |
|---|---|---|---|---|---|---|
| | | | | A | B | C |
| 4 | A | 3 | 6 | 3'–2" | 0'–3" | – |
| | B | 3 | 1 | 2'–10" | – | – |
| | C | 4 | 15 | 4'–8" | 0'–6" | – |
| | D | 4 | 5 | 4'–8" | – | – |
| | F | 4 | 1 | 3'–2" | – | – |
| | G | 3 | 5 | 2'–0" | 1'–3" | – |
| | H | 3 | 6 | * | * | * |
| | N | 3 | 3 | 3'–2" | 3'–2" | 3'–2" |
| 6 | A | 3 | 9 | 3'–2" | 0'–3" | – |
| | B | 3 | 1 | 4'–10" | – | – |
| | C | 4 | 15 | 6'–8" | 0'–6" | – |
| | D | 4 | 5 | 4'–8" | – | – |
| | F | 4 | 1 | 3'–2" | – | – |
| | G | 3 | 5 | 2'–0" | 1'–3" | – |
| | H | 3 | 9 | * | * | * |
| | N | 3 | 3 | 3'–2" | 3'–2" | 3'–2" |
| 8 | A | 3 | 12 | 3'–2" | 0'–3' | – |
| | B | 4 | 1 | 6'–10" | – | – |
| | C | 4 | 15 | 8'–8" | 0'–6" | – |
| | D | 4 | 5 | 4'–8" | – | – |
| | F | 4 | 1 | 3'–2" | – | – |
| | G | 3 | 5 | 2'–0" | 1'–3" | – |
| | H | 3 | 12 | * | * | * |
| | N | 3 | 3 | 3'–2" | 3'–2" | 3'–2" |
| 10 | A | 3 | 13 | 3'–2" | 0'–3' | – |
| | B | 3 | 2 | 8'–10" | – | – |
| | C | 4 | 16 | 10'–8" | 0'–6" | – |
| | D | 4 | 4 | 4'–8" | – | – |
| | E | 5 | 6 | 10'–8" | – | – |
| | G | 3 | 5 | 2'–0" | 1'–3" | – |
| | H | 3 | 14 | * | * | * |
| | I | 4 | 8 | 4'–8" | 3'–2" | 3'–2" |
| | L | 4 | 5 | 4'–3" | – | – |

* SEE DIAGRAM FOR DIMENSIONS. 4', 6', 8' AND 10' INLETS

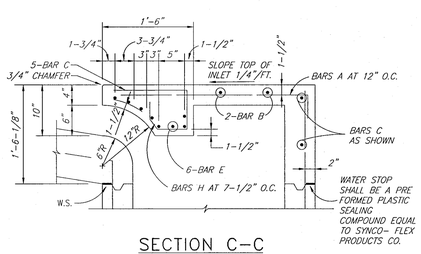


## SECTION C–C

(SECT_C–C)

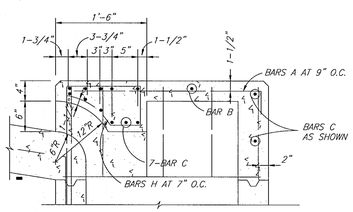


NOTE: FOR ADDITIONAL INFORMATION SEE SECTION C–C

## SECTION E–E

(SECT_E–E)

NOTES:

THE FLOOR OF THE EXCAVATION FOR INLET BOX MUST PROVIDE A FIRM, LEVEL BED FOR THE BASE SECTION TO REST UPON.

A MINIMUM OF 6 INCHES OF 1" DIAMETER (MAXIMUM) ROCK OR GRAVEL SHALL BE USED TO PREPARE THE BEDDING TO FINAL GRADE OR LIEU OF THIS, AT LEAST 6 INCHES OF 2–SACK CEMENT STABLIZED SAND SHALL BE USED TO PREPARE THE BEDDING TO GRADE. CEMENT STABLIZED–SAND SHALL BE ALLOWED TO SET BY KEEPING HOLE PUMPED DRY.

AFTER CASING HAS BEEN INSTALLED ON THE PROPER BEDDING, THE BACKFILL MATERIAL, WHICH IS FREE FLOWING AND CLEAR OF ROCKS, IN EXCESS OF 4" DIAMETER AND OTHER LUMPS WHICH WOULD PROHIBIT PROPER COMPACTION, SHALL BE COMMENCED IN LIFTS OF NO MORE THAN 18". THE MATERIAL USED FOR BACKFILL SHOULD BE A TYPE SUITABLE TO OBTAIN THE DENSITY REQUIREMENTS FOR THE SPECIFIC JOB.

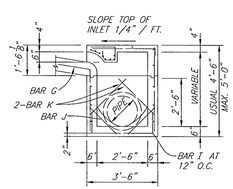


## SECTION B–B

(SECT_B–B)

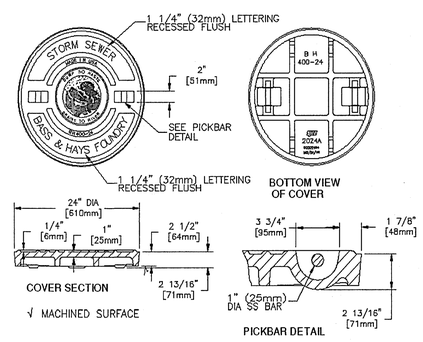


BH and Bass & Hays are registered trademarks of Bass & Hays Foundry, Inc.

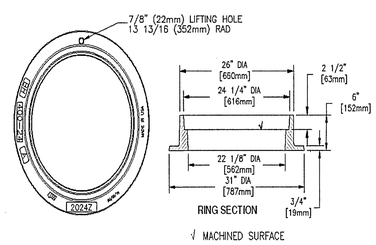


P-201402-01 Det-7

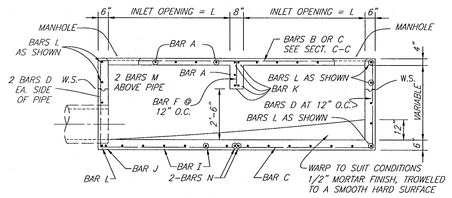


SECTION A–A

12, 14, 16 AND 20 FOOT INLETS

(SECT_A–A)

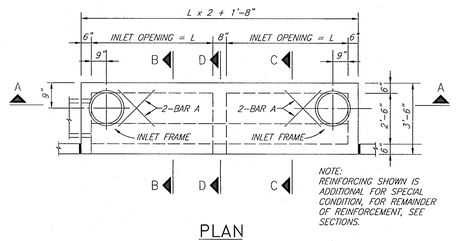


PLAN

20 FOOT INLETS

(PLAN_20)

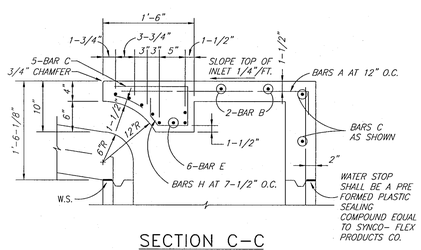


SECTION C–C

(SECT_C–C)

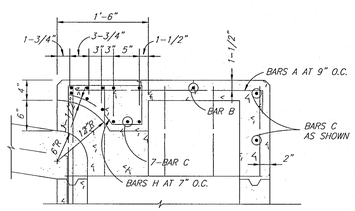


NOTE: FOR ADDITIONAL INFORMATION SEE SECTION C–C

SECTION D–D

(SECT_D–D)

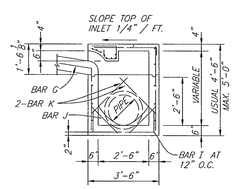


SECTION B–B

(SECT_B–B)

DOUBLE INLETS

DIMENSIONS SHOWN ARE FOR MAXIMUM SIZE INLETS

| INLET LENGTH | BAR TYPE | BAR DIA. (1/8 IN.) | NO. REQ'D | BAR DIMENSIONS | | |
|---|---|---|---|---|---|---|
| | | | | A | B | C |
| 6 FT. | A | 3 | 15 | 3'-2" | 0'-6" | – |
| | B | 3 | 2 | 11'-6" | – | – |
| | C | 4 | 16 | 13-4" | 0'-6" | – |
| | D | 4 | 9 | 4'-8" | – | – |
| | E | 5 | 6 | 13-4" | – | – |
| | F | 4 | 5 | 1'-2" | – | – |
| | G | 3 | 12 | 2'-0" | 1'-3" | – |
| | H | 3 | 26 | * | * | * |
| | I | 4 | 12 | 4'-8" | 3'-2" | 3'-2" |
| | J | 5 | 1 | * | * | * |
| | K | 5 | 6 | 3'-2" | 0'-6" | – |
| | L | 4 | 11 | 3'-2" | 0'-6" | – |
| | M | 4 | 2 | 3'-0" ** | – | – |
| | N | 4 | 2 | 4'-8" | 3'-2" | 4'-8" |
| | | | | | | |
| 7 FT. | A | 3 | 17 | 3'-2" | 0'-6" | – |
| | B | 3 | 2 | 13'-6" | – | – |
| | C | 4 | 16 | 15'-4" | 0'-3' | – |
| | D | 4 | 9 | 4'-8" | – | – |
| | E | 5 | 6 | 15'-4" | – | – |
| | F | 4 | 5 | 1'-2" | – | – |
| | G | 3 | 15 | 2'-0" | 1'-3" | – |
| | H | 3 | 32 | * | * | * |
| | I | 4 | 14 | 4'-8" | 3'-2" | 3'-2" |
| | J | 5 | 1 | * | * | * |
| | K | 5 | 6 | 3'-2" | 0'-6" | – |
| | L | 4 | 11 | 3'-2" | 0'-6" | – |
| | M | 4 | 2 | 3'-0" ** | – | – |
| | N | 4 | 2 | 4'-8" | 3'-2" | 4'-8" |
| | | | | | | |
| 8 FT. | A | 3 | 19 | 3'-2" | 0'-6" | – |
| | B | 3 | 2 | 15'-6" | – | – |
| | C | 4 | 16 | 17'-4" | 0'-6" | – |
| | D | 4 | 9 | 4'-8" | – | – |
| | E | 5 | 6 | 17'-4" | – | – |
| | F | 4 | 5 | 1'-2" | – | – |
| | G | 3 | 12 | 2'-0" | 1'-3" | – |
| | H | 3 | 26 | * | * | * |
| | I | 4 | 16 | 4'-8" | 3'-2" | 3'-2" |
| | J | 5 | 1 | * | * | * |
| | K | 5 | 6 | 3'-2" | 0'-6" | – |
| | L | 4 | 11 | 3'-2" | 0'-6" | – |
| | M | 4 | 2 | 3'-0" ** | – | – |
| | N | 4 | 2 | 4'-8" | 3'-2" | 4'-8" |
| | | | | | | |
| 10 FT. | A | 3 | 23 | 3'-2" | 0'-6" | – |
| | B | 3 | 2 | 19'-6" | – | – |
| | C | 4 | 16 | 21'-4" | 0'-6" | – |
| | D | 4 | 9 | 4'-8" | – | – |
| | E | 5 | 6 | 21'-4" | – | – |
| | F | 4 | 5 | 1'-2" | – | – |
| | G | 3 | 15 | 2'-0" | 1'-3" | – |
| | H | 3 | 32 | * | * | * |
| | I | 4 | 20 | 4'-8" | 3'-2" | 3'-2" |
| | J | 5 | 1 | * | * | * |
| | K | 5 | 6 | 3'-2" | 0'-6" | – |
| | L | 4 | 11 | 3'-2" | 0'-6" | – |
| | M | 4 | 2 | 3'-0" ** | – | – |
| | N | 4 | 2 | 4'-8" | 3'-2" | 4'-8" |

* SEE DIAGRAM FOR DIMENSIONS.
** FIELD CUT AS REQUIRED TO ACCOMODATE DRAIN PIPE 16" AND 20" INLETS

REINFORCING STEEL SCHEDULE

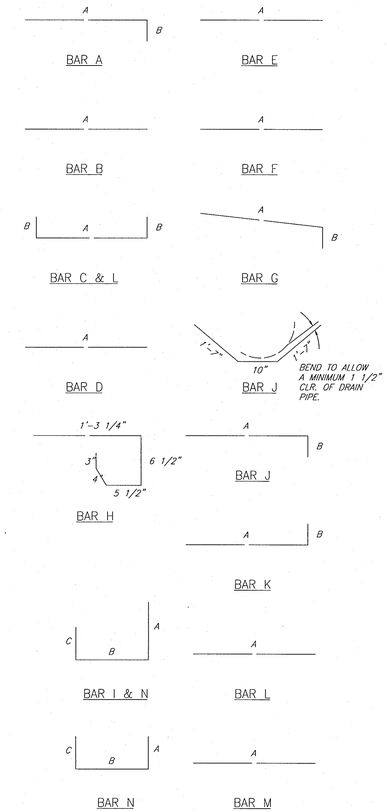


△ BEND TO ALLOW A MINIMUM 1 1/2" CIR. OF DRAIN PIPE
* SEE DIAGRAMS FOR DIMENSIONS
** FIELD CUT AS REQUIRED TO ACCOMODATE DRAIN PIPE

BAR BENDING DIAGRAMS

Drawing: Q:\2013 jobs\115-157 park place radius\Phase 1\115-157 vehicle.dwg Saved By: Gustine Save Time: 12/12/2014 6:24:39 AM
Plotted by: gustine Plot Date: 1/20/2016 9:31 AM

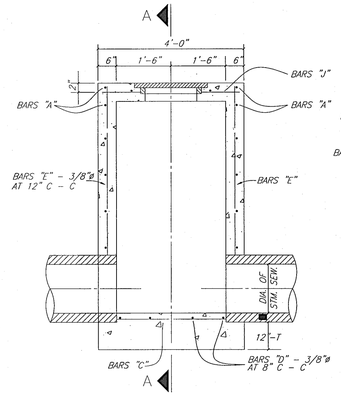


ELEVATION

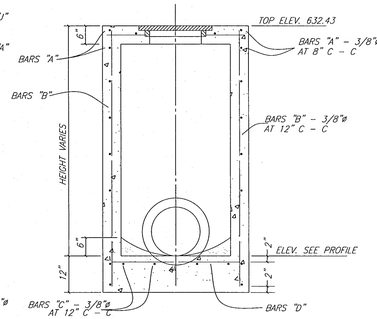


SECTION A–A

## STORM SEWER TYPE A MANHOLE

MAX. PIPE SIZE 30"

(TYPEAMH)

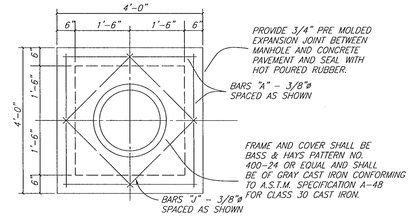


TOP PLAN
TYPE A & TYPE B
STORM SEWER MANHOLE

(MH_TOP)

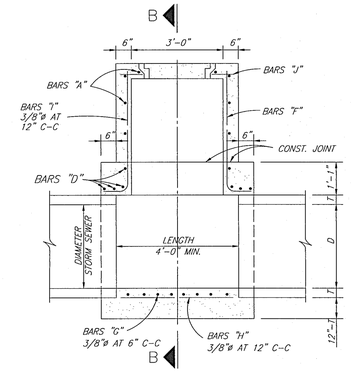


ELEVATION

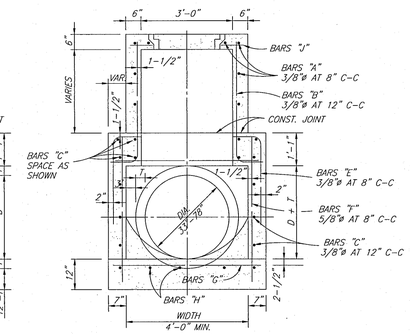


SECTION B–B

## TYPE B STORM SEWER MANHOLE

MAX. PIPE SIZE 78"

(TYPEBMH)

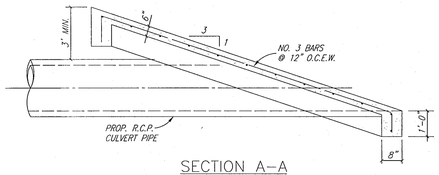


SECTION A–A

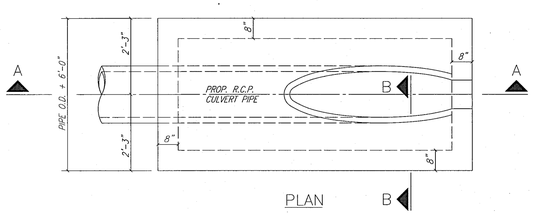


PLAN

B

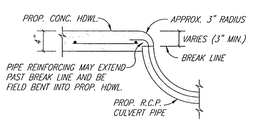


SECTION B–B

## SLOPED CONCRETE HEADWALL

(SLOPEHWL)

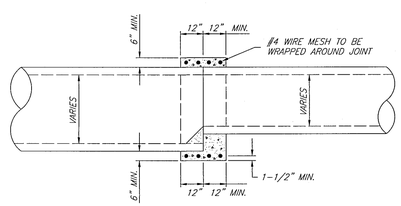


## DETAIL OF CONCRETE COLLAR FOR R.C.P. OR R.C.A.P. CONNECTIONS

INSIDE JOINT SHALL BE CONCRETE MORTAR

(CONCCOL)

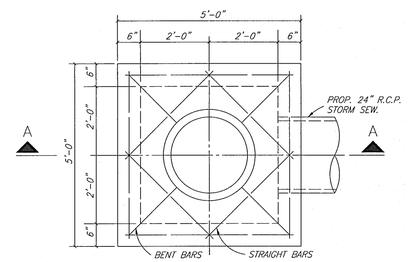


PLAN

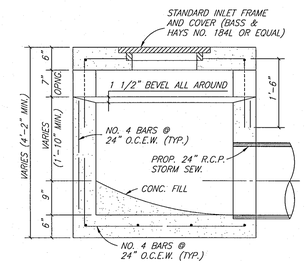


SECTION A–A

## STANDARD DROP INLET

(DROPINLET)



Drawing: G:\2013 jobs\13-157 park place extra\Phase 1\13-157 details.dwg Saved By: Gdaston Save Time: 12/12/2014 6:34:28 AM Plotted by: gdaston Plot Date: 1/26/2016 9:33 AM

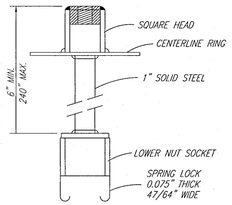


SPRING LOCK VALVE EXTENSION

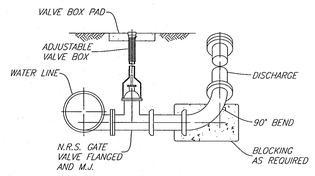


BLOW OFF VALVE

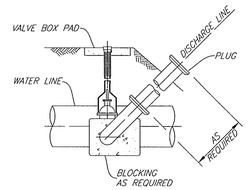


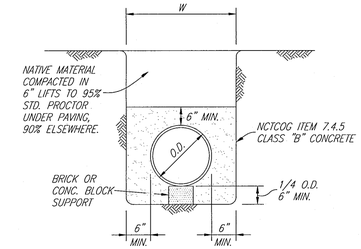


CLASS G EMBEDMENT

CONCRETE ENCASEMENT

NO SCALE

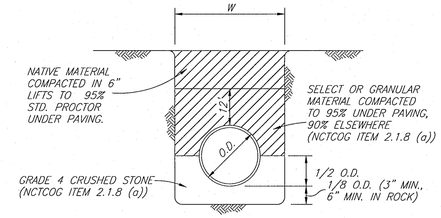


CLASS B+ EMBEDMENT

STD PVC WATER

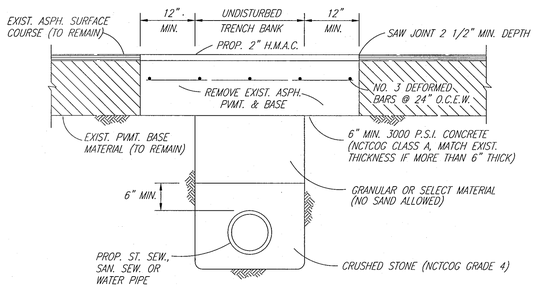


ASPHALT STREET REPAIR

NO SCALE

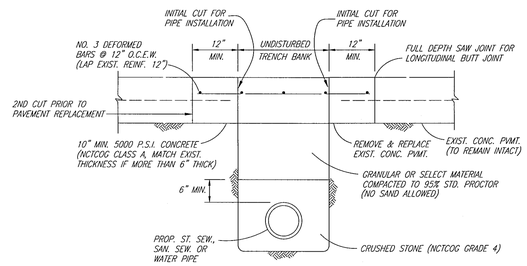


CONCRETE STREET REPAIR

NO SCALE

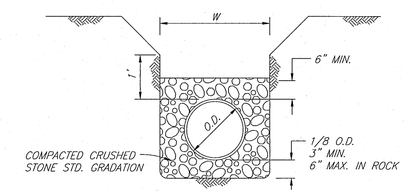


CLASS H EMBEDMENT

P.V.C. PIPE ONLY

STD. P.V.C. SEWER INSTALLATION

STD. P.V.C., R.C.C.P. & DUCTILE WATER INSTALLATION

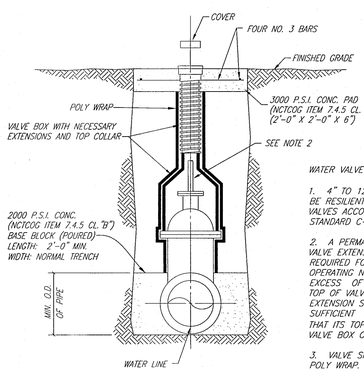


WATER VALVE NOTES:

1. 4" TO 12" GATE VALVE SHALL BE RESILIENT SEATED WEDGE GATE VALVES ACCORDANCE WITH AWWA STANDARD C-509.

2. A PERMANENTLY ATTACHED VALVE EXTENSION STEM SHALL BE REQUIRED FOR ANY VALVE WHOSE OPERATING NUT IS LOCATED IN EXCESS OF 4 FEET BELOW THE TOP OF VALVE BOX. THIS EXTENSION SHALL BE OF SUFFICIENT LENGTH TO INSURE THAT ITS TOP IS WITHIN 4" OF THE VALVE BOX COVER.

3. VALVE SHALL BE WRAPPED IN POLY WRAP.

VALVE SETTING & BOX

NO SCALE

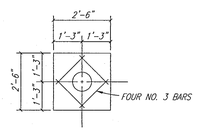


VALVE BOX PAD PLAN

NO SCALE

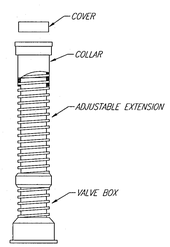


VALVE BOX WITH EXTENSION

NO SCALE

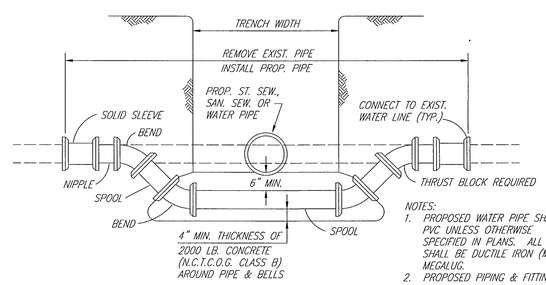


NOTES:

1. PROPOSED WATER PIPE SHALL BE PVC UNLESS OTHERWISE SPECIFIED IN PLANS. ALL FITTINGS SHALL BE DUCTILE IRON (M.J.-P.E.) MEGALUG.
2. PROPOSED PIPING & FITTINGS ARE SYMMETRIC ABOUT CENTER OF PROP. SAN. SEW. OR ST. SEW. PIPE AND SHALL RETAIN TEST PRESSURES.
3. ALL THRUST BLOCKING SHALL BE SUBSIDIARY TO UNIT PRICE.
4. CROSSING OF SANITARY SEWER SHALL BE IN ACCORDANCE WITH T.N.R.C.C. REQUIREMENTS. (CHAPTER 317.13 APPENDIX E)

WATER MAIN LOWERING

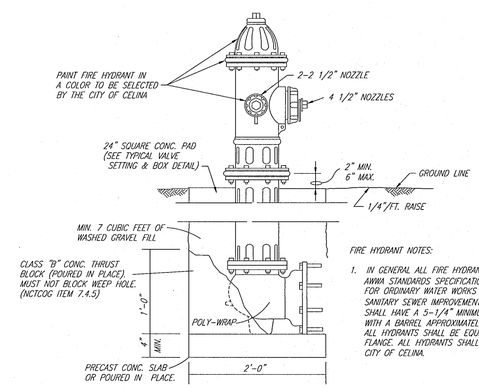


FIRE HYDRANT NOTES:

1. IN GENERAL ALL FIRE HYDRANTS SHALL CONFORM TO AWWA STANDARDS SPECIFICATIONS FOR FIRE HYDRANTS FOR ORDINARY WATER WORKS SERVICE FOR WATER AND SANITARY SEWER IMPROVEMENTS. FIRE HYDRANTS SHALL HAVE A 5-1/4" MINIMUM VALVE OPENING AND WITH A BARREL APPROXIMATELY 7" INSIDE DIAMETER. ALL HYDRANTS SHALL BE EQUIPPED WITH A BREAKAWAY FLANGE. ALL HYDRANTS SHALL BE APPROVED BY THE CITY OF CELINA.

TYPICAL FIRE HYDRANT INSTALLATION

NO SCALE

Drawing: G:\2013 jobs\13-157 pvb place celina\Phase 1\13-157 details.dwg Saved By: dbatton Save Time: 12/12/2014 6:34:28 AM
Plotted by: dbatton Plot Date: 1/05/2016 9:33 AM

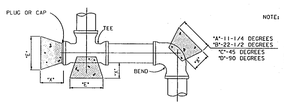


NOTE: ALL CALCULATIONS ARE BASED ON A WATER LINE PRESSURE OF 150 PSI AND AN ALLOWABLE SOIL HORIZONTAL PRESSURE OF 2,500 POUNDS PER SQUARE FOOT. THESE ARE MINIMUM REQUIREMENTS. INCREASE AREA FOR CONDITIONS OTHER THAN THESE VALUES.

HORIZONTAL BLOCKING TABLE

| PIPE SIZE | "X" DIM. IN FT. | 11-1/4 DEGREES "A" | 11-1/4 DEGREES MIN. AREA | 22-1/2 DEGREES "B" | 22-1/2 DEGREES MIN. AREA | 45 DEGREES "C" | 45 DEGREES MIN. AREA | 90 DEGREES "D" | 90 DEGREES MIN. AREA | TEE & PLUG "E" | TEE & PLUG MIN. AREA |
|---|---|---|---|---|---|---|---|---|---|---|---|
| 4" | 1.5 | 1.00 | 1.00 | 1.00 | 1.00 | 1.00 | 1.00 | 1.00 | 1.06 | 1.00 | 1.00 |
| 6" | 1.5 | 1.00 | 1.00 | 1.00 | 1.00 | 1.14 | 1.30 | 1.55 | 2.40 | 1.30 | 1.70 |
| 8" | 1.5 | 1.00 | 1.00 | 1.08 | 1.18 | 1.52 | 2.31 | 2.07 | 4.27 | 1.74 | 3.02 |
| 10" | 1.5 | 1.00 | 1.00 | 1.35 | 1.84 | 1.90 | 3.61 | 2.58 | 6.66 | 2.17 | 4.71 |
| 12" | 1.5 | 1.00 | 1.33 | 1.63 | 2.65 | 2.28 | 5.19 | 3.10 | 9.60 | 2.61 | 6.79 |
| 14" | 1.5 | 1.03 | 1.81 | 1.90 | 3.60 | 2.66 | 7.07 | 3.61 | 13.06 | 3.04 | 9.24 |
| 16" | 2.0 | 1.18 | 2.36 | 2.17 | 4.71 | 3.04 | 9.23 | 4.13 | 17.06 | 3.47 | 12.06 |
| 18" | 2.0 | 1.33 | 2.99 | 2.44 | 5.96 | 3.42 | 11.68 | 4.65 | 21.59 | 3.91 | 15.27 |
| 20" | 2.0 | 1.48 | 3.70 | 2.71 | 7.35 | 3.80 | 14.43 | 5.16 | 26.66 | 4.34 | 18.85 |
| 21" | 2.0 | 1.55 | 4.07 | 2.85 | 8.11 | 3.99 | 15.91 | 5.42 | 29.39 | 4.56 | 20.78 |
| 24" | 2.0 | 1.77 | 5.32 | 3.25 | 10.59 | 4.56 | 20.77 | 6.20 | 38.39 | 5.21 | 27.14 |
| 27" | 2.5 | 1.99 | 6.73 | 3.66 | 13.40 | 5.13 | 26.29 | 6.97 | 48.58 | 5.86 | 34.35 |
| 30" | 2.5 | 2.22 | 8.31 | 4.07 | 16.55 | 5.70 | 32.46 | 7.74 | 59.98 | 6.51 | 42.41 |
| 33" | 2.5 | 2.44 | 10.06 | 4.47 | 20.02 | 6.27 | 39.28 | 8.52 | 72.57 | 7.16 | 51.31 |
| 36" | 2.5 | 2.66 | 11.97 | 4.88 | 23.83 | 6.84 | 46.74 | 9.29 | 86.37 | 7.81 | 61.07 |
| 39" | 3.0 | 2.88 | 14.05 | 5.29 | 27.97 | 7.41 | 54.86 | 10.07 | 101.36 | 8.47 | 71.68 |
| 42" | 3.0 | 3.10 | 16.30 | 5.69 | 32.43 | 7.98 | 63.62 | 10.85 | 117.56 | 9.12 | 83.13 |

NOTE: CLASS "B" CONCRETE 2,000 PSI SHALL BE USED FOR ALL BLOCKING UNLESS OTHERWISE NOTED ON STANDARD DETAILS AND / OR PLANS.

THE MINIMUM VERTICAL DIMENSION OF ALL BLOCKING SHALL BE 1.5 TIMES THE PIPE DIAMETER WITH AT LEAST 0.75 TIMES THE PIPE DIAMETER EXTENDING BOTH ABOVE AND BELOW THE PIPE CENTERLINE. THIS DIMENSION DETERMINES THE "A" DIMENSION FOR 11-1/4° BENDS.

FOR 22-1/2°, 45°, 90°, AND TEES AND PLUGS, THE VERTICAL DIMENSION SHALL BE EQUAL TO THE HORIZONTAL DIMENSION SHOWN TO PRODUCE THE REQUIRED MINIMUM AREA.

ALL MINIMUM AREAS ARE IN SQUARE FEET.

BLOCKING TO BE AGAINST UNDISTURBED TRENCH WALLS AND BOTTOM.

## HORIZONTAL THRUST BLOCKING DETAIL

NO SCALE

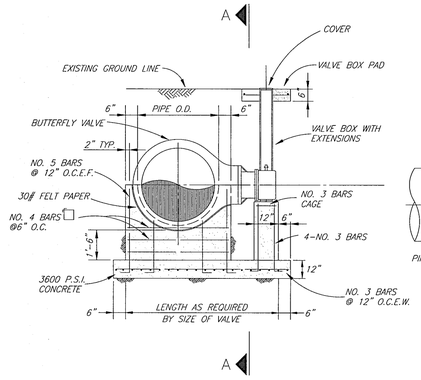


SECTION B–B

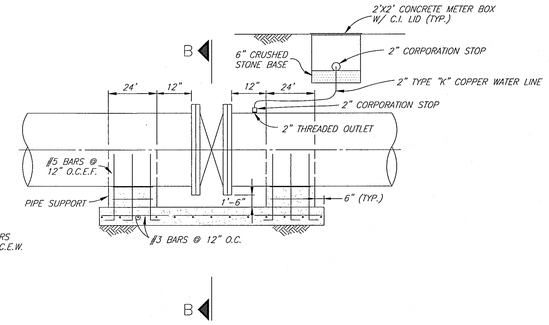


SECTION A–A

## BUTTERFLY VALVE INSTALLATION

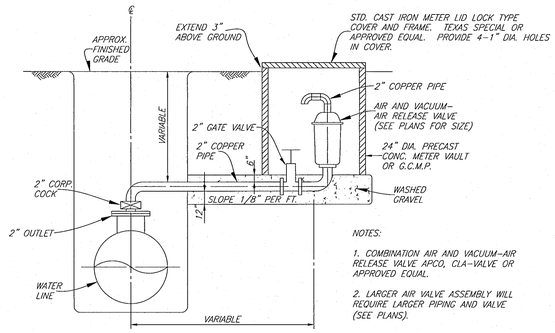


NOTES:

1. COMBINATION AIR AND VACUUM–AIR RELEASE VALVE APCO, CLA–VALVE OR APPROVED EQUAL.
2. LARGER AIR VALVE ASSEMBLY WILL REQUIRE LARGER PIPING AND VALVE (SEE PLANS).

## AIR AND VACUUM – AIR RELEASE VALVE INSTALLATION

BORING NOTES:

1. 2 MORTAR BANDS FOR R.C.C.P. AND CEMENT LINED & COATED STEEL PIPE MAY BE USED IN LIEU OF SKIDS & STRAPS.
2. CONTRACTOR SHALL PROVIDE SUPPORT UNDER CARRIER PIPE TO HAVE MIN. 1" CLEARANCE BETWEEN PIPE BELL AND ENCASEMENT PIPE.
3. ENDS OF ENCASEMENT PIPE SHALL BE PLUGGED WITH BRICK AND MORTAR FOR ROADWAY CROSSINGS AND CLAY FOR RAILROAD CROSSINGS.

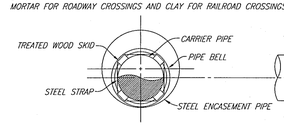


SECTION

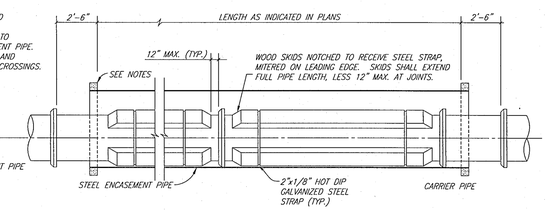


ELEVATION

## ENCASED ROAD OR RAILROAD BORE

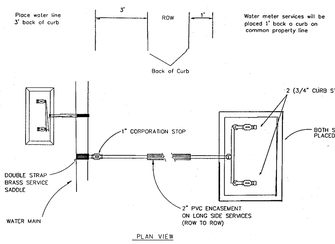


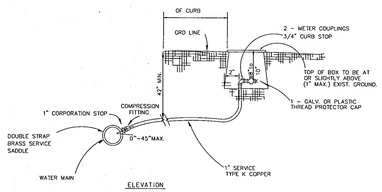


NOTES

1. WHERE TAPPING EXISTING MAINS OR PVC MAINS EXIST, DOUBLE STRAPPED SADDLES, STAINLESS STEEL, OR EPOXY COATED DUCTILE IRON SADDLES SHALL BE USED.
2. COPPER SERVICES SHALL BE TYPE K CONTINUOUS WITH NO JOINTS FROM CORP. STOP TO QUARTER BEND.
3. ALL COPPER FITTINGS SHALL BE COMPRESSION FITTINGS.
4. METERS SHALL NOT BE INSTALLED IN EXISTING OR PROPOSED SIDEWALK OR DRIVEWAYS.

## SERVICE CONNECTION DETAIL (LOTS SMALLER THAN10,000 S.F.)

NO SCALE

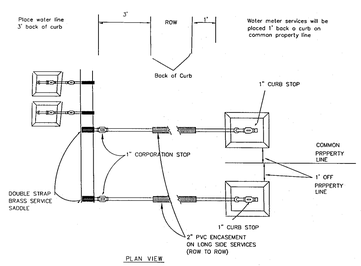


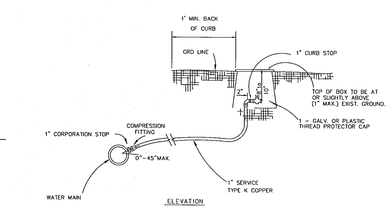


NOTES

1. WHERE TAPPING EXISTING MAINS OR PVC MAINS EXIST, DOUBLE STRAPPED SADDLES, STAINLESS STEEL, OR EPOXY COATED DUCTILE IRON SADDLES SHALL BE USED.
2. COPPER SERVICES SHALL BE CONTINUOUS WITH NO JOINTS FROM CORP. STOP TO QUARTER BEND.
3. ALL COPPER FITTINGS SHALL BE COMPRESSION FITTINGS.
4. METERS SHALL NOT BE INSTALLED IN EXISTING OR PROPOSED SIDEWALK OR DRIVEWAYS.

## SERVICE CONNECTION DETAIL (LOTS10,000 S.F. OR LARGER)

NO SCALE

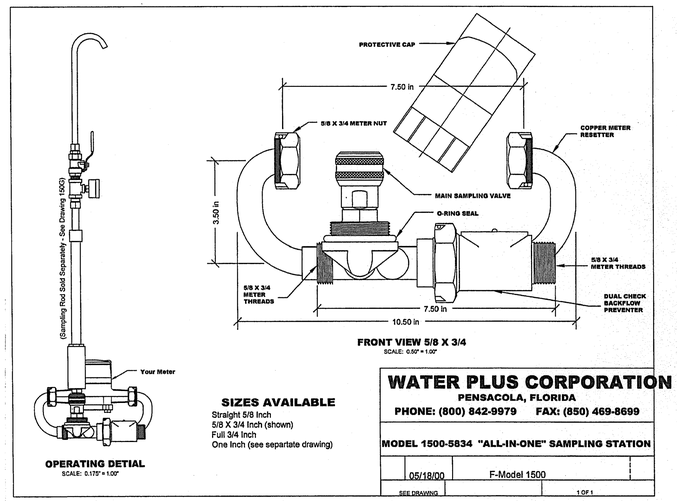


**SIZES AVAILABLE**

Straight 5/8 Inch
5/8 X 3/4 Inch (shown)
Full 3/4 Inch
One Inch (see separtate drawing)

**WATER PLUS CORPORATION**
PENSACOLA, FLORIDA
PHONE: (800) 842-9979 FAX: (850) 469-8699

MODEL 1500-5834 "ALL-IN-ONE" SAMPLING STATION

| | | |
|---|---|---|
| 05/18/00 | F-Model 1500 | |
| SEE DRAWING | | 1 OF 1 |

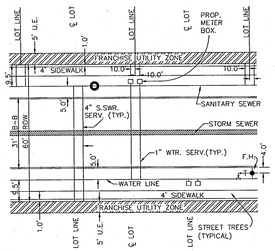


## UTILITY PLACEMENT DETAIL

NO SCALE

Drawing: G:\2013 jobs\13-137 park place estate\Phase 1\13-137 detailing.Dwg Saved By: Gaston Save Time: 12/12/2014 6:24:28 AM
Plotted by: gaston Plot Date: 1/05/2016 9:33 AM
P:\Projects\Highland Parcel 1&2\05-Design\Civil\Details.dgn

P-201402-01 Det-11

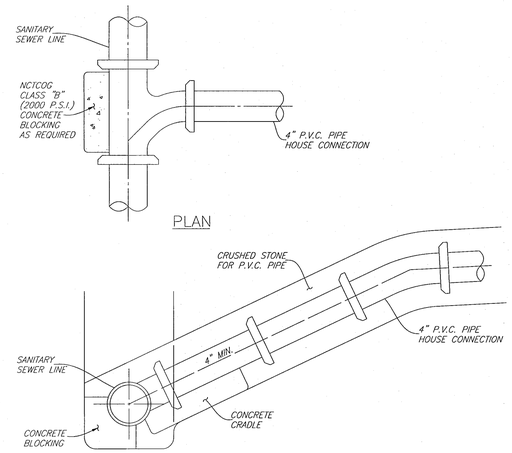


## TYPICAL SEWER HOUSE SERVICE CONNECTION

SANITARY SEWER CLEANOUT BOOTS SHALL BE BASS & HAYS # 339 OR APPROVED EQUAL.

(HOUSE_SERVICE)

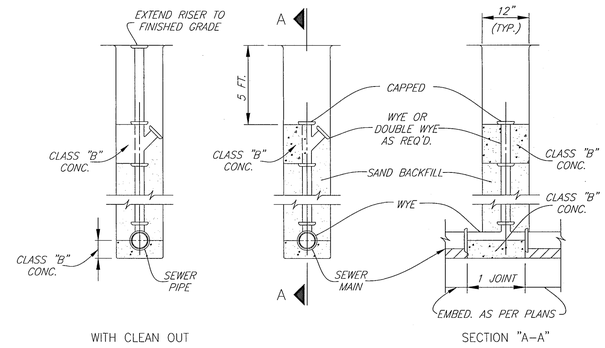


## DEEP CUT CLEANOUT

(DEEPCUT-CO)

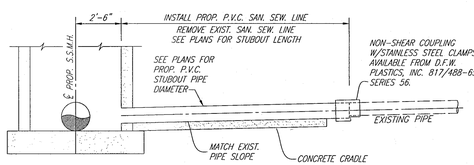


## TYPICAL STUBOUT CONNECTION

NO SCALE

NOTE:
MATCH SOFFITS UPSTREAM OF MANHOLE
MATCH FLOW LINES DOWNSTREAM OF MANHOLE

(STUBOUT)

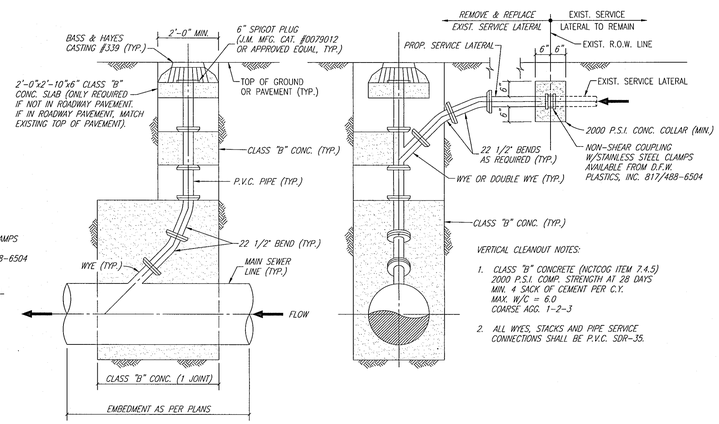


VERTICAL CLEANOUT NOTES:

1. CLASS "B" CONCRETE (NCTCOG ITEM 7.4.5) 2000 P.S.I. COMP. STRENGTH AT 28 DAYS MIN. 4 SACK OF CEMENT PER C.Y. MAX. W/C = 6.0 COARSE AGG. 1-2-3
2. ALL WYES, STACKS AND PIPE SERVICE CONNECTIONS SHALL BE P.V.C. SDR-35.

## VERTICAL CLEANOUT CONNECTION

(CONNECTION, WYE, CONCRETE, BENDS, CASTING, ETC. ALL SUBSIDIARY TO CLEANOUT)

(VERT-CO)

**Cleanout**

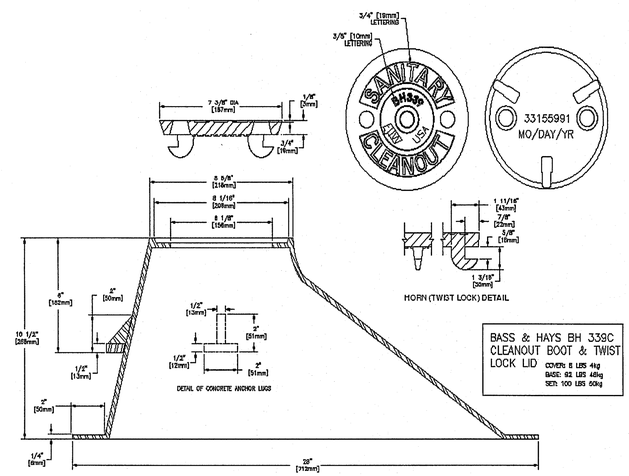


**Valve box**

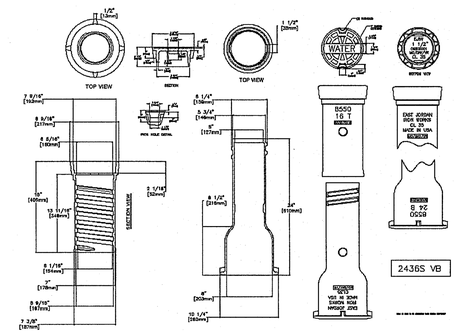


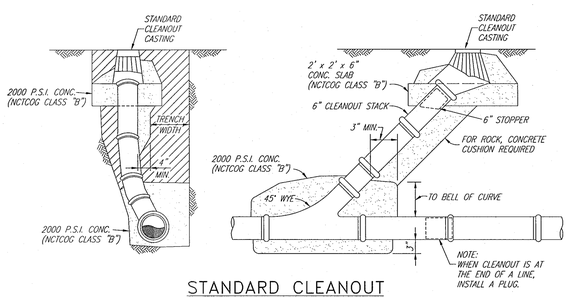


## STANDARD CLEANOUT

NO SCALE

(CLEANOUT)

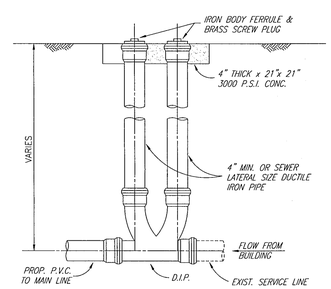


## TYPICAL TWO WAY CLEANOUT

NO SCALE

(2-WAY-CO)

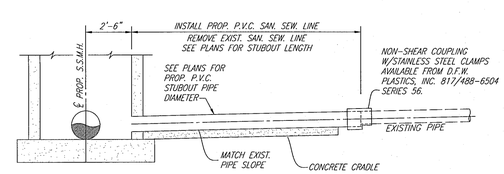


## TYPICAL STUBOUT CONNECTION

NO SCALE

NOTE:
MATCH SOFFITS UPSTREAM OF MANHOLE
MATCH FLOW LINES DOWNSTREAM OF MANHOLE

(STUBOUT)



Drawing: G:\2013 jobs\13-157 pvs pine estate\Phase 1\13-157 plot-dwg Saved By: dpatton Save Time: 12/10/2014 6:24:28 AM
Plotted by: dpatton Plot Date: 12/15/2016 9:23 AM

## TABLE OF DIMENSIONS & REINFORCING STEEL
(Wings for One Structure End)

| Dimensions | | | | | Variable Reinforcing | | | | Estimated Quantities (3) per ft of wing length (2~Wings) | |
|---|---|---|---|---|---|---|---|---|---|---|
| Maximum Wingwall Height Hw | W | X | Y | Z | Bars J1 | | Bars J2 | | | |
| | | | | | Size | Spa | Size | Spa | Reinf (Lb/Ft) | Conc (CY/Ft) |
| 2'-6" | 2'- 5" | 1'- 0" | 9" | 7" | #4 | 1'-0" | #4 | 1'-0" | 33.73 | 0.248 |
| 3'-0" | 2'- 5" | 1'- 0" | 9" | 7" | #4 | 1'-0" | #4 | 1'-0" | 37.07 | 0.261 |
| 3'-6" | 2'- 5" | 1'- 0" | 9" | 7" | #4 | 1'-0" | #4 | 1'-0" | 37.74 | 0.273 |
| 4'-0" | 2'- 5" | 1'- 0" | 9" | 7" | #4 | 1'-0" | #4 | 1'-0" | 38.41 | 0.285 |
| 4'-6" | 3'- 2" | 1'- 6" | 1'- 0" | 7" | #4 | 1'-0" | #4 | 1'-0" | 41.75 | 0.330 |
| 5'-0" | 3'- 2" | 1'- 6" | 1'- 0" | 7" | #4 | 1'-0" | #4 | 1'-0" | 45.09 | 0.343 |
| 5'-6" | 3'- 2" | 1'- 6" | 1'- 0" | 7" | #4 | 1'-0" | #4 | 1'-0" | 45.75 | 0.355 |
| 6'-0" | 3'- 2" | 1'- 6" | 1'- 0" | 7" | #4 | 1'-0" | #4 | 1'-0" | 46.42 | 0.367 |
| 7'-0" | 3'- 8" | 1'- 9" | 1'- 3" | 7" | #4 | 1'-0" | #4 | 1'-0" | 52.77 | 0.414 |
| 8'-0" | 4'- 2" | 2'- 0" | 1'- 6" | 8" | #5 | 1'-0" | #4 | 1'-0" | 60.19 | 0.486 |
| 9'-0" | 4'- 8" | 2'- 3" | 1'- 9" | 8" | #4 | 6" | #4 | 6" | 81.49 | 0.535 |
| 10'-0" | 5'- 2" | 2'- 6" | 2'- 0" | 8" | #5 | 6" | #4 | 6" | 97.25 | 0.584 |
| 11'-0" | 5'- 8" | 2'- 9" | 2'- 3" | 8" | #6 | 6" | #5 | 6" | 133.65 | 0.634 |
| 12'-0" | 6'- 2" | 3'- 0" | 2'- 6" | 9" | #7 | 6" | #5 | 6" | 162.29 | 0.721 |
| 13'-0" | 6'- 8" | 3'- 3" | 2'- 9" | 11" | #7 | 6" | #5 | 6" | 178.80 | 0.856 |
| 14'-0" | 7'- 2" | 3'- 6" | 3'- 0" | 1'- 0" | #8 | 6" | #5 | 6" | 216.78 | 0.959 |
| 15'-0" | 7'- 8" | 4'- 0" | 3'- 0" | 1'- 1" | #9 | 6" | #6 | 6" | 283.06 | 1.068 |
| 16'-0" | 8'- 2" | 4'- 6" | 3'- 0" | 1'- 3" | #9 | 6" | #6 | 6" | 297.02 | 1.234 |

## TABLE OF WINGWALL REINFORCING (2~Wings)

| Bar | Size | No. | Spa |
|---|---|---|---|
| D | #5 | ~ | 1'-0" |
| E | #4 | ~ | 1'-0" |
| F | #4 | ~ | 1'-0" |
| G | #6 | 4 | ~ |
| M | #4 | 4 | ~ |
| P | #4 | ~ | 1'-0" |
| R | #5 | 6 | ~ |
| V | #4 | ~ | 1'-0" |

## TABLE OF ESTIMATED CULVERT TOEWALL QUANTITIES

| Bar | Size | No. | Spa |
|---|---|---|---|
| L | #4 | ~ | 1'-6" |
| Q | #4 | 1 | ~ |
| Reinf (Lb/Ft) | | | 2.45 |
| Conc (CY/Ft) | | | 0.037 |

## WING DIMENSION CALCULATIONS:

Formulas: (All values are in Feet)

Hw = H + T + C − 0.250'

A = (Hw − 0.333') (SL)

B = (A) Tangent (30°)

Lw = (A) ÷ Cosine (30°)

For Cast-in-place culverts:

Ltw = (N) (S) + (N + 1) (U)

For Precast culverts:

Ltw = (N) (2U + S) + (N − 1) (0.500')

Total Wingwall Area (Two Wings ~ S.F.) = (Hw + 0.333') (Lw)

Hw = Height of Wingwall
SL:1 = Side Slope Ratio (Horizontal:1 Vertical)
Lw = Length of Wingwall
Ltw = Culvert Toewall Length
N = Number of Culvert Spans

See applicable box culvert standard for H, S, T, and U values.

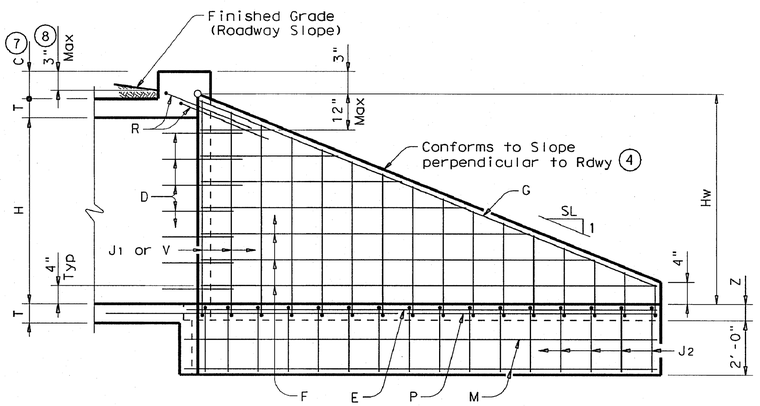


## INSIDE ELEVATION
(Showing reinforcing. Culvert and Culvert Toewall reinforcing not shown for clarity.)

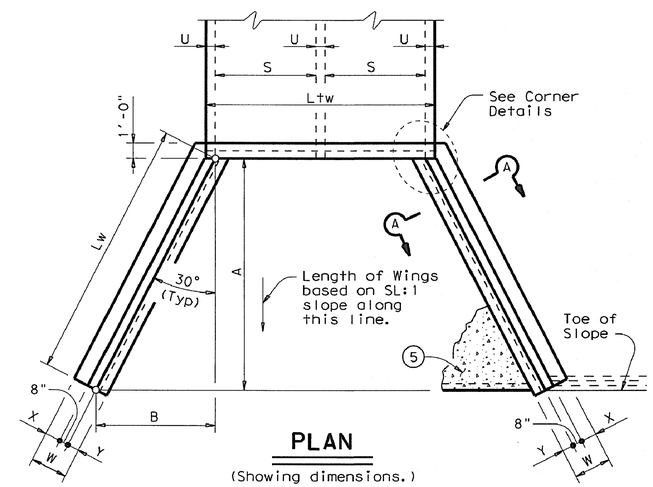


## PLAN
(Showing dimensions.)

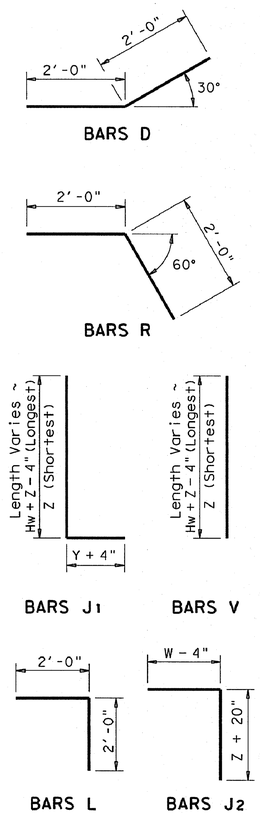


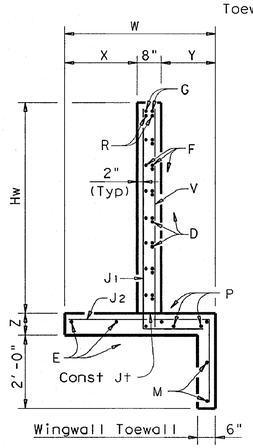


## SECTION A-A

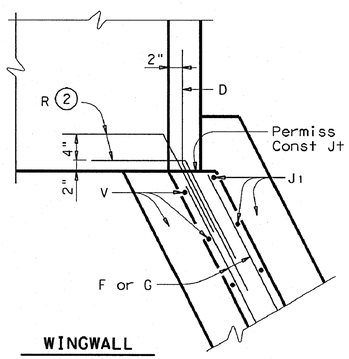


WINGWALL

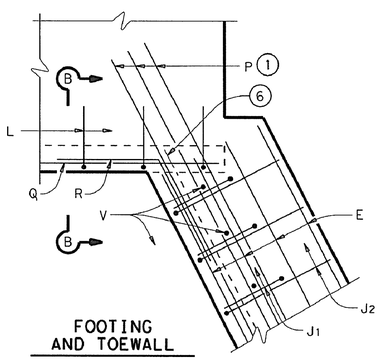


FOOTING AND TOEWALL

## CORNER DETAILS
(Culvert and Culvert Toewall reinforcing not shown for clarity.)

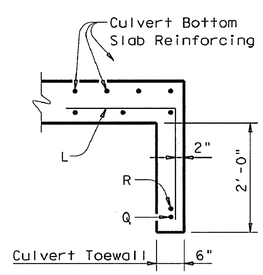


## SECTION B-B (5)

(1) Extend Bars P 3'-0" minimum into bottom slab of Box Culvert.

(2) Adjust to fit as necessary to maintain 1 ¼" clear cover and 4" minimum between bars.

(3) Quantities shown are based on an average wing height for two wings (one structure end). To determine total quantities for two wings multiply the tabulated values by Lw.

(4) Recommended values of Slope are: 2:1, 3:1, 4:1, & 6:1.

(5) When shown elsewhere on the plans, a 5" deep concrete riprap shall be constructed. Payment for riprap shall be as required by Item 432, "Riprap". Unless otherwise shown on the plans or directed by the Engineer, the riprap shall have a 6" wide by 1'-6" deep reinforced concrete toewall along all edges adjacent to natural ground; the toewall shall be reinforced by extending typical riprap reinforcing into the toewall; construction joints or grooved joints, oriented in the direction of flow, shall extend across the full distance of the riprap, at intervals of approximately 20'. When such riprap is provided, the culvert toewall shown in SECTION B-B will not be required.

(6) At Contractor's option, Culvert Toewall may be ended flush with Wingwall Toewall. Adjust reinforcing from that shown as necessary.

(7) 0" min to 5'-0" max. Estimated curb heights are shown elsewhere in the plans. For structures with pedestrian rail, bicycle rail or curbs taller than 1'-0", refer to ECD standard. For structures with T6 bridge rail, refer to T6-CM standard. For structures with traffic rail, other than T6, refer to RAC standard.

(8) For vehicle safety, curb heights and wall heights shall be reduced, if necessary, to provide a maximum 3" projection above finished grade. No changes will be made in quantities and no additional compensation will be allowed for this work.

## GENERAL NOTES:

Designed according to AASHTO LRFD Specifications.
All reinforcing steel shall be Grade 60.
Synthetic fibers listed on the "Fibers for Concrete" Material Producer List (MPL) may be used in lieu of steel reinforcing in riprap concrete unless noted otherwise.
All concrete shall be Class "C" and shall have a minimum compressive strength of 3600 psi.
All reinforcing bars shall be adjusted to provide a minimum of 1 ¼" clear cover.
When structure is founded on solid rock, depth of toewalls for culverts and wingwalls may be reduced or eliminated as directed by the Engineer.
See BCS sheet for additional dimensions and information.
The quantities for concrete and reinforcing steel resulting from the formulas given on this sheet are for Contractor's information only.

Texas Department of Transportation
Bridge Division

# CONCRETE WINGWALLS WITH FLARED WINGS FOR 0° SKEW BOX CULVERTS

## FW-0

| FILE: fw-0stde.dgn | DN: GAF | CK: CAT | DW: TxDOT | CK: GAF |
|---|---|---|---|---|
| © TxDOT February 2010 | DISTRICT | FEDERAL AID PROJECT | | SHEET |
| REVISIONS 11-10: Add note for synthetic fibers. | COUNTY | CONTROL | SECT | JOB | HIGHWAY |

P-201402-01 Det-14

## TABLE OF DIMENSIONS & REINFORCING STEEL
(Wings for One Structure End)

| Dimensions | | | | | Variable Reinforcing | | | | Estimated Quantities per ft of wing (2~Wings) ④ | | Estimated Quantities per ft of Toewall (1~Toewall) | |
|---|---|---|---|---|---|---|---|---|---|---|---|---|
| | | | | | Bars J1 | | Bars J2 | | | | | |
| Maximum Wingwall Height Hw | W | X | Y | Z | Size | Spa | Size | Spa | Reinf (Lb/Ft) | Conc (CY/Ft) | Reinf (Lb/Ft) | Conc (CY/Ft) |
| 2'-6" | 2'-10" | 10" | 1'- 0" | 7" | #4 | 1'-0" | #4 | 1'-0" | 48.64 | 0.406 | 6.85 | 0.071 |
| 2'-9" | 2'-10" | 10" | 1'- 0" | 7" | #4 | 1'-0" | #4 | 1'-0" | 49.31 | 0.424 | 6.85 | 0.071 |
| 3'-0" | 2'-10" | 10" | 1'- 0" | 7" | #4 | 1'-0" | #4 | 1'-0" | 49.98 | 0.444 | 6.85 | 0.071 |
| 3'-3" | 2'-10" | 10" | 1'- 0" | 7" | #4 | 1'-0" | #4 | 1'-0" | 53.32 | 0.462 | 6.85 | 0.071 |
| 3'-6" | 2'-10" | 10" | 1'- 0" | 7" | #4 | 1'-0" | #4 | 1'-0" | 53.98 | 0.480 | 6.85 | 0.071 |
| 4'-0" | 3'- 2" | 1'- 2" | 1'- 0" | 7" | #4 | 1'-0" | #4 | 1'-0" | 55.77 | 0.532 | 6.85 | 0.071 |
| 4'-6" | 3'- 2" | 1'- 2" | 1'- 0" | 7" | #4 | 1'-0" | #4 | 1'-0" | 59.77 | 0.568 | 6.85 | 0.071 |
| 5'-0" | 3'- 9" | 1'- 7" | 1'- 2" | 7" | #4 | 1'-0" | #4 | 1'-0" | 63.45 | 0.632 | 6.96 | 0.075 |
| 5'-6" | 3'- 9" | 1'- 7" | 1'- 2" | 7" | #4 | 1'-0" | #4 | 1'-0" | 67.46 | 0.668 | 6.96 | 0.075 |
| 6'-0" | 4'- 4" | 2'- 0" | 1'- 4" | 7" | #5 | 1'-0" | #5 | 1'-0" | 80.67 | 0.730 | 7.07 | 0.078 |
| 6'-6" | 4'- 4" | 2'- 0" | 1'- 4" | 7" | #5 | 1'-0" | #5 | 1'-0" | 85.05 | 0.768 | 7.07 | 0.078 |
| 7'-0" | 5'- 0" | 2'- 3" | 1'- 9" | 8" | #5 | 1'-0" | #5 | 1'-0" | 92.15 | 0.864 | 8.07 | 0.093 |
| 7'-6" | 5'- 0" | 2'- 3" | 1'- 9" | 8" | #5 | 1'-0" | #5 | 1'-0" | 96.54 | 0.902 | 8.07 | 0.093 |
| 8'-0" | 5'- 6" | 2'- 8" | 1'-10" | 8" | #5 | 6" | #5 | 6" | 139.04 | 0.962 | 8.13 | 0.095 |
| 8'-6" | 5'- 6" | 2'- 8" | 1'-10" | 8" | #5 | 6" | #5 | 6" | 144.47 | 1.000 | 8.13 | 0.095 |
| 9'-6" | 6'- 0" | 2'-10" | 2'- 2" | 9" | #5 | 6" | #5 | 6" | 156.93 | 1.136 | 8.41 | 0.110 |
| 10'-6" | 6'- 5" | 3'- 0" | 2'- 5" | 9" | #6 | 6" | #5 | 6" | 196.27 | 1.234 | 8.57 | 0.117 |
| 11'-6" | 7'- 2" | 3'- 6" | 2'- 8" | 11" | #6 | 6" | #6 | 6" | 230.13 | 1.438 | 9.52 | 0.140 |
| 12'-6" | 7'- 8" | 3'- 9" | 2'-11" | 1'- 0" | #7 | 6" | #6 | 6" | 283.41 | 1.592 | 9.74 | 0.157 |
| 13'-6" | 8'- 2" | 4'- 0" | 3'- 2" | 1'- 2" | #8 | 6" | #6 | 6" | 348.72 | 1.804 | 10.02 | 0.186 |
| 14'-6" | 8'-10" | 4'- 5" | 3'- 5" | 1'- 4" | #9 | 6" | #6 | 6" | 432.94 | 2.046 | 10.30 | 0.218 |
| 15'-6" | 9'- 6" | 4'-10" | 3'- 8" | 1'- 6" | #9 | 6" | #7 | 6" | 489.52 | 2.302 | 11.24 | 0.253 |
| 16'-0" | 9'-11" | 5'- 0" | 3'-11" | 1'- 7" | #9 | 6" | #7 | 6" | 505.72 | 2.448 | 11.47 | 0.279 |

## TABLE OF WINGWALL REINFORCING (2~Wings)

| Bar | Size | No. | Spa |
|---|---|---|---|
| D1 | #6 | ~ | 1'-0" |
| D2 | #6 | ~ | 1'-0" |
| E1 | #4 | ~ | 1'-0" |
| F | #4 | ~ | 1'-0" |
| G | #6 | ~ | 8" |
| M1 | #4 | 4 | ~ |
| P | #4 | ~ | 1'-0" |
| V | #4 | ~ | 1'-0" |
| | | | |
| | | | |

## TABLE OF TOEWALL REINFORCING

| Bar | Size | No | Spa |
|---|---|---|---|
| J3 | #4 | ~ | 1'-0" |
| M2 | #4 | 2 | ~ |
| E2 | #4 | ~ | 1'-0" |
| | | | |
| | | | |

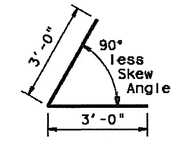


BARS D1

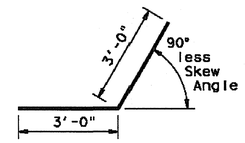


BARS D2

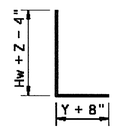


BARS J1

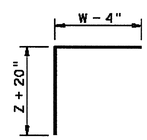


BARS J2

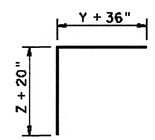


BARS J3

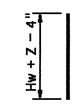


BARS V

## WING DIMENSION CALCULATIONS:

Formulas: (All values are in Feet)

Hw = H + T + C
Lw = (Hw) (SL) ÷ Cosine θ for Ty PW-1
= (Hw - 1') (SL) ÷ Cosine θ for Ty PW-2 and Hw ≥ 4'
= (Hw - 0.5') (SL) ÷ Cosine θ for Ty PW-2 and Hw < 4'

For Cast-in-place culverts:
Ltw = [(N) (S) + (N + 1) (U)] ÷ Cosine θ

For Precast culverts:
Ltw = [(N) (2 U + S) + (N - 1) (0.5')] ÷ Cosine θ
Total Wingwall Area (Two Wings ~ SF)
= (2) (Hw) (Lw) for Ty PW-1
= (2) (Hw) (Lw) - 6 SF for Ty PW-2 and Hw ≥ 4'
= (2) (Hw) (Lw) - 1.5 SF for Ty PW-2 and Hw < 4'

Hw = Height of Wingwall
Lw = Length of Wingwall
Ltw = Culvert Toewall Length
N = Number of Culvert Spans
SL:1 = Channel Slope ratio. (Horizontal: 1 Vertical, Usual value is 2:1)
θ = Culvert Skew

See applicable box culvert standard for S, H, T and U values.

① Skew Angle = 0°

② At discharge end, chamfer may be ¾".

③ For 15° Skew ~ 1"
For 30° Skew ~ 2"
For 45° Skew ~ 3"

④ Quantities shown are for two Type PW-1 wings. Adjust concrete volume for Type PW-2 wings. To determine estimated quantities for two wings, multiply the tabulated values by Lw. Quantities shown do not include weight of Bars D.

⑤ Provide weepholes for Hw = 5'-0" and greater. Fill around weepholes with coarse gravel.

⑥ Extend Bars E2 1'-6" minimum into the wingwall footing.

⑦ Lap Bars M1 1'-6" minimum with Bars M2.

⑧ Bars G equally spaced at 8" maximum, place as shown. Provide at least two pair Bars G per wing.

⑨ 0" min to 5'-0" max. Estimated curb heights are shown elsewhere in the plans. For structures with pedestrian rail, bicycle rail or curbs taller than 1'-0", refer to ECD standard. For structures with T6 bridge rail, refer to T6-CM standard. For structures with traffic rail, other than T6, refer to RAC standard.

⑩ For vehicle safety, the following requirements must be met:
- For structures without bridge rail, curbs cannot project more than 3" above finished grade.
- For structures with bridge rail, build curbs flush with finished grade.

Reduce curb heights, if necessary, to meet the above requirements. No changes will be made in quantities and no additional compensation will be allowed for this work.

⑪ 1'-0" typical. 2'-0" typical when RAC standard is referenced elsewhere in the plans.

⑫ 3'-0" for Hw < 4'.

⑬ 6" for Hw < 4'.

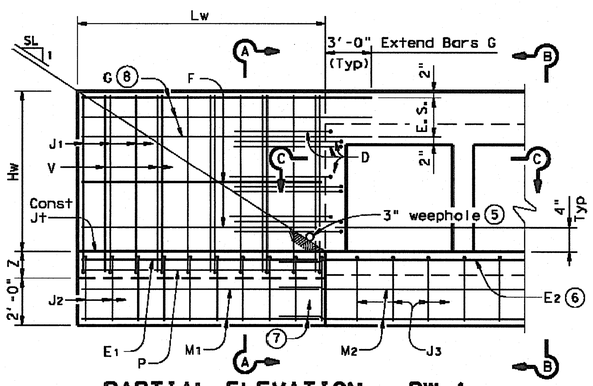


PARTIAL ELEVATION - PW-1

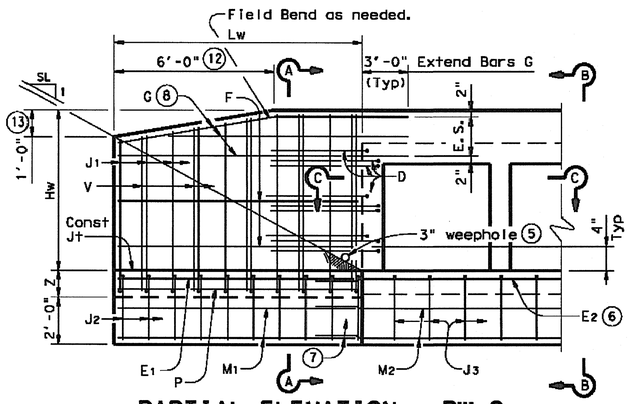


PARTIAL ELEVATION - PW-2

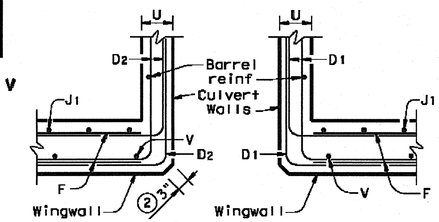


SECTION C-C

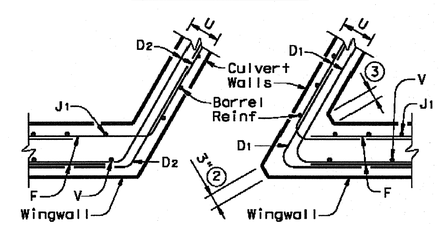


SECTION C-C

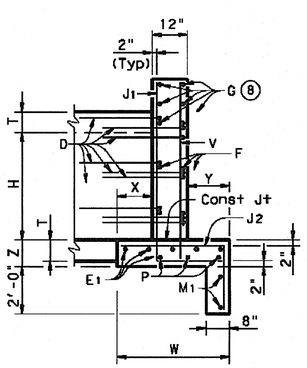


SECTION A-A
(Showing Wing Reinf)

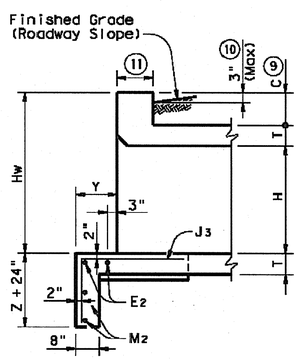


SECTION B-B
(Showing Wing Reinf)

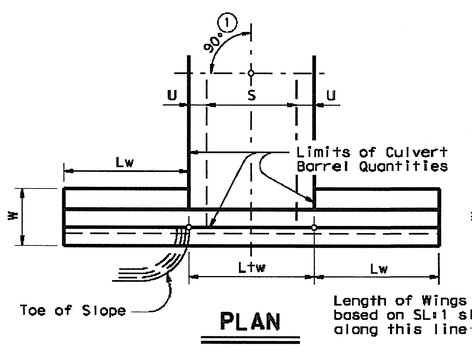


PLAN

DETAILS FOR NON-SKEWED BOX CULVERTS

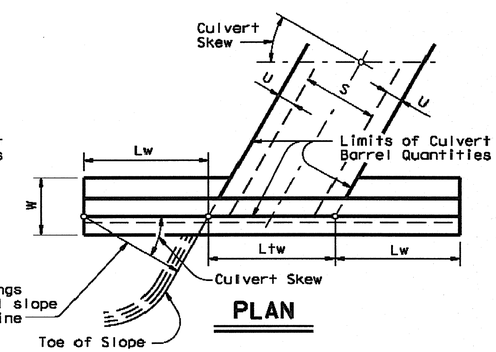


PLAN

DETAILS FOR SKEWED BOX CULVERTS
(Showing 30° Skew)

## GENERAL NOTES:

Designed in accordance with AASHTO LRFD Bridge Design Specifications.

Provide Class "C" Concrete (f'c = 3,600 psi Min) and Grade 60 reinforcing steel.

Provide 1 ¼" Min clear cover to reinforcing steel.

Depth of toewalls for wingwalls and culverts may be reduced or eliminated when founded on solid rock, when directed by the Engineer.

See BCS sheet for wingwall type and additional dimensions and information.

The quantities for concrete and reinforcing steel resulting from the formulas given on this sheet are for the Contractor's information only.

## DESIGNER NOTES:

Type PW-1 can be used for all applications and must be used if railing is to be mounted to the wingwall.

Type PW-2 can only be used for applications without a railing mounted to the wingwall.


DISCLAIMER:
The use of this standard is governed by the "Texas Engineering Practice Act". No warranty of any kind is made by TxDOT for any purpose whatsoever. TxDOT disclaims responsibility for the conversion of this standard to other formats or for incorrect results or damages resulting from its use.


LEVELS DISPLAYED
ACC:

Texas Department of Transportation
Bridge Division

# CONCRETE WINGWALLS WITH PARALLEL WINGS FOR BOX CULVERTS TYPES PW-1 AND PW-2

PW

| FILE: pwsfde01.dgn | DN: GAF | CK: CAT | DW: TxDOT | CK: GAF |
|---|---|---|---|---|
| © TxDOT February 2010 | DISTRICT | FEDERAL AID PROJECT | | SHEET |
| REVISIONS 11-10: Reinforcing Quantities. 01-12: PW-1 & PW-2. | COUNTY | | CONTROL SECT JOB | HIGHWAY |

P-201402-01 Det-15